CALTECH

The Fierz Interference Term in Beta Decay Spectrum of Ultracold Neutrons

Kevin Peter Hickerson
California Institute of Technology
Pasadena, CA 91125

Neutron decay parameters

Standard parameterization of beta decay

$$\frac{d\Gamma}{dE_e} \propto p_e E_e (E_0 - E_e)^2 \left[1 + a\frac{\vec{p}_e \cdot \vec{p}_\nu}{E_e E_\nu} + b\frac{m_e}{E_e} + A\frac{\vec{p}_e \cdot \vec{J}}{E_e} + B\frac{\vec{p}_\nu \cdot \vec{J}}{E_\nu} + D\frac{\vec{p}_e \times \vec{p}_\nu \cdot \vec{J}}{E_e E_\nu} + \cdots \right] d\Omega$$

Neutron decay parameters

Fierz interference term

$$\frac{d\Gamma}{dE_e} \propto p_e E_e (E_0 - E_e)^2 \left[1 + a \frac{\vec{p}_e \cdot \vec{p}_\nu}{E_e E_\nu} + b \frac{m_e}{E_e} + A \frac{\vec{p}_e \cdot \vec{J}}{E_e} + B \frac{\vec{p}_\nu \cdot \vec{J}}{E_\nu} + D \frac{\vec{p}_e \times \vec{p}_\nu \cdot \vec{J}}{E_e E_\nu} + \cdots \right] d\Omega$$

is polarization and momentum independent

$$d\Gamma_b = d\Gamma_{\mathrm{SM}} \left(1 + b \frac{m_e}{E_e} \right)$$

Fierz term modifies neutron lifetime

Fierz interference term affects the neutron lifetime from the Standard Model

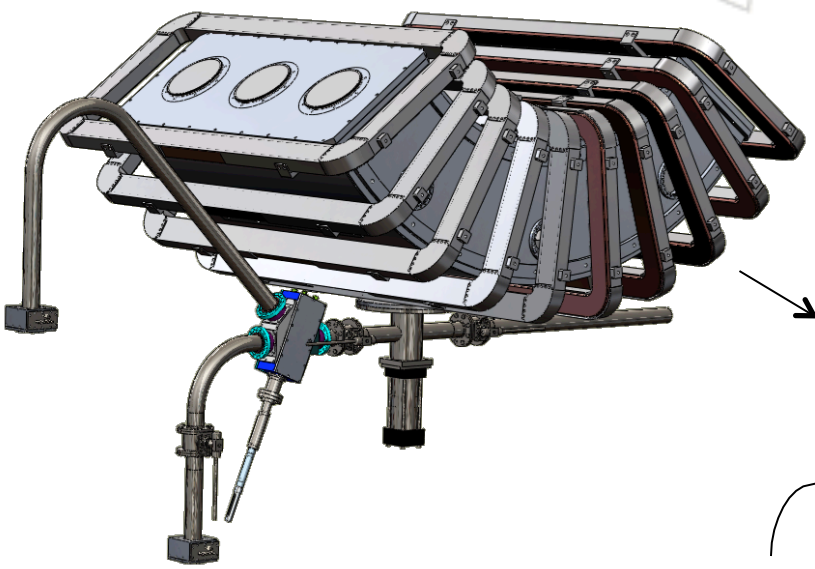

$$\tau_n = \frac{4908.7 \pm 1.9}{|V_{ud}|^2(1+3^2)}$$

$$\tau_n = (1 - 0.65\ b)\,\tau_{\mathrm{SM}}$$

Weak decay structure

- The most general Lagrangian for beta decay over all Dirac matrices and chiralities

$$\mathcal{L} = -\frac{4G_{\mathrm{F}\mu}}{\sqrt{2}} a^{\gamma}_{\alpha\delta} \bar{e}_{\alpha} \Gamma^{\gamma} \nu_e \bar{u} \Gamma_{\gamma} d_{\delta}$$

$$\Gamma^{\mathrm{S}} = 1, \quad \Gamma^{\mathrm{V}} = \gamma^{\alpha}, \quad \Gamma^{\mathrm{T}} = \sigma^{\alpha\beta}/\sqrt{2}$$

- In the Standard Model including radiative corrections

$$a^{V}_{LL} = V_{ud}(1 + \Delta_{\beta} + \Delta_{\mu}), \quad a^{\gamma}_{\epsilon\delta} = 0$$

- All other couplings serve as test for new physics!

S. Profumo, M. J. Ramsey-Musolf, and S. Tulin. PRD 75, 075017 (2007)

Fierz interference

- The most general Fierz term for nuclear beta decay

$$b = \pm \frac{2\ \mathrm{Re}\left[M_F^2 g_V g_S a_{LL}^V (a_{RL}^S + a_{RR}^S)^* - 2M_{GT}^2 g_A g_T a_{LL}^V a_{RL}^{T*}\right]}{M_F^2\left(g_V^2 |a_{LL}^V|^2 + g_S^2 |a_{RL}^S + a_{RR}^S|^2\right) + M_{GT}^2\left(g_A^2 |a_{LL}^V|^2 + 4 g_T^2 |a_{RL}^T|^2\right)}$$

- Fermi and Gamow-Teller terms are special cases

$$b_F = \pm 2 \frac{g_S}{g_V} \frac{a_{RL}^S + a_{RR}^S}{a_{LL}^V} \qquad b_{GT} = \pm 4 \frac{g_T}{g_A} \frac{a_{RL}^T}{a_{LL}^V}$$

- Neutron beta-decay provides a unique combination

$$b_n = \frac{|b_F| - 3\lambda |b_{GT}|}{1 + 3\lambda^2}$$

Fierz term from super allowed decays

- The best measurement of the Fermi Fierz term is from super allowed $0+ \rightarrow 0+$ nuclear beta decay

$$b_F = \pm 2 \frac{g_S}{g_V} \frac{a^S_{RL} + a^S_{RR}}{a^V_{LL}}$$

$$= 0.0026(26)$$

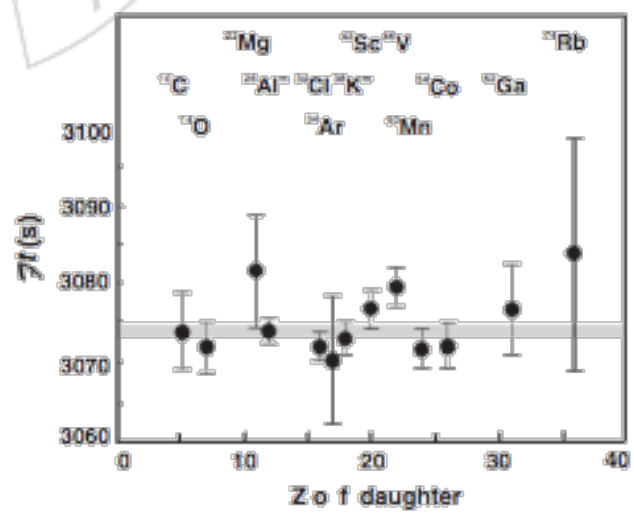

I. S. Towner and J. C. Hardy,
Phys. Rev. C 71, 055501 (2005)
Phys. Rev. C 77, 025501 (2008)

- But the neutron term is still unmeasured!

S. Profumo, M. J. Ramsey-Musolf, and S. Tulin. PRD 75, 075017 (2007)

Testing SUSY with UCNb

- Some SUSY models populate nonzero b
- First tests just scratch surface
- Future tests will probe model parameter space

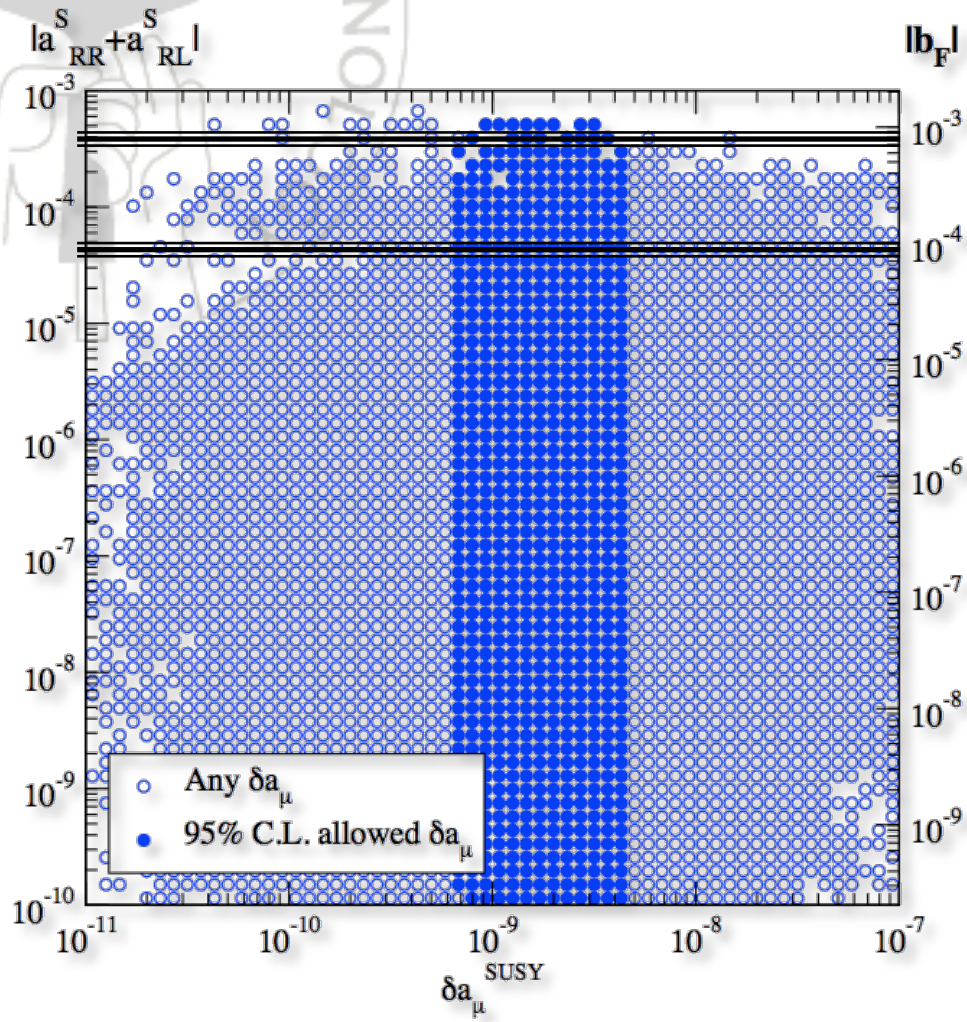

S. Profumo, M. J. Ramsey-Musolf, S. Tulin. PRD 75, 075017 (2007)

Fierz term from beta-spectrum

- Fierz term shifts the neutron beta spectrum

$$P_b = P_{\mathrm{SM}} \left(\frac{1 + b\frac{m_e}{E_e}}{1 + b\left\langle \frac{m_e}{E_e} \right\rangle} \right)$$

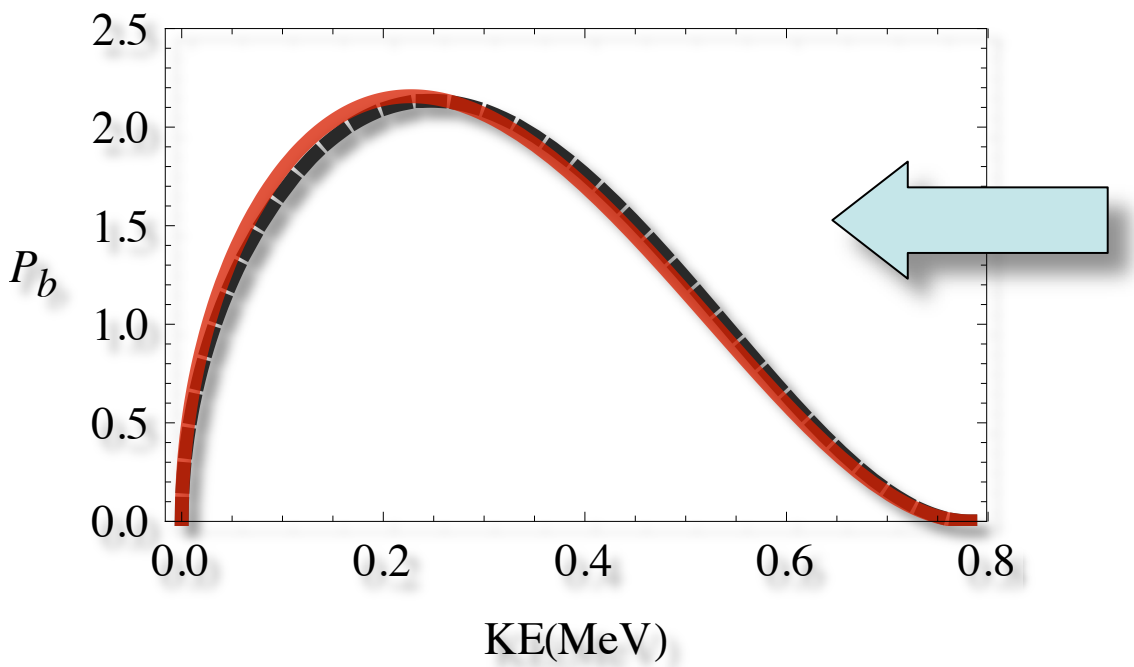

Fierz term from beta-spectrum

- Small effect requires large statistics

$$\frac{1}{\sigma_b^2} = N \left\langle \left(\frac{m_e}{E_e} - \left\langle \frac{m_e}{E_e} \right\rangle \right)^2 \right\rangle$$

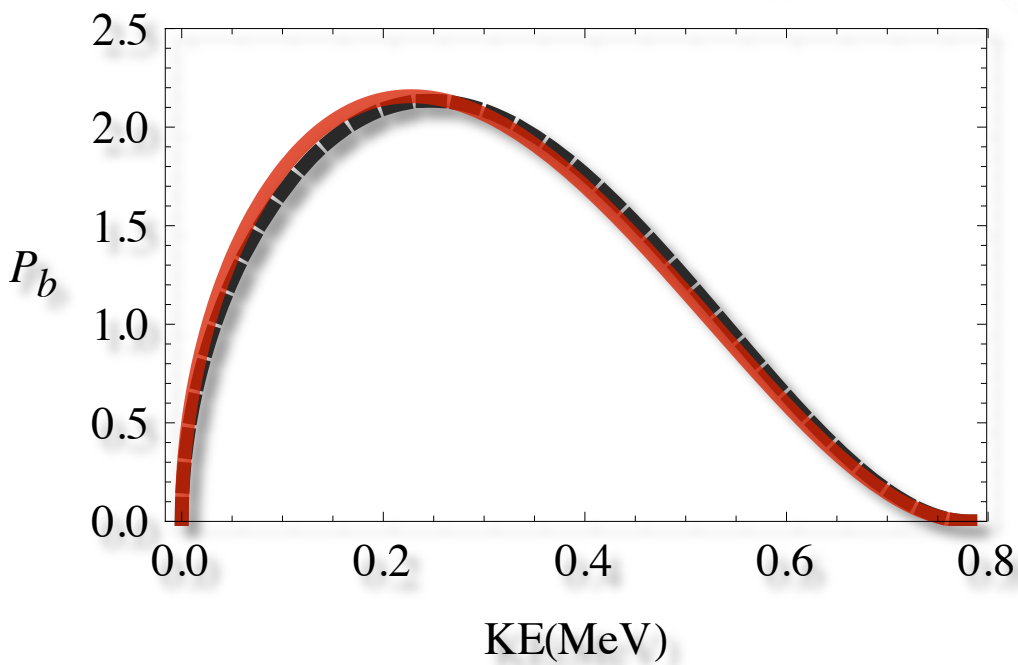

$$\sigma_b = \frac{7.5}{\sqrt{N}}$$

F. Glück, Joó, J. Last,
Nucl. Phys. A, 593 (1995)

Fierz term from beta-spectrum

- Small effect requires large statistics

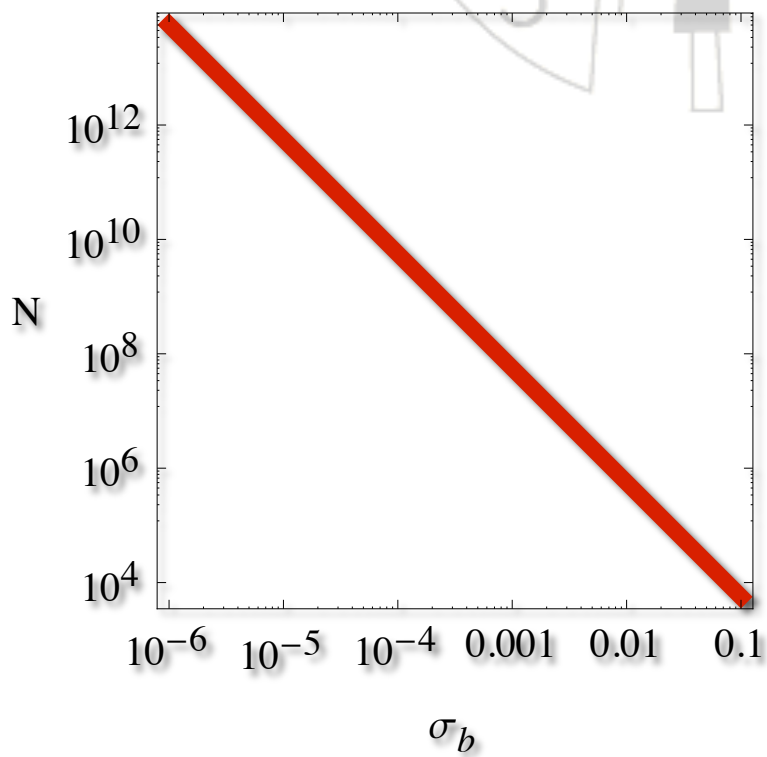

$$\sigma_b = \frac{7.5}{\sqrt{N}}$$

F. Glück, Joó, J. Last,
Nucl. Phys. A, 593 (1995)

UCNb at LANSCE

- First run at the Los Alamos UCN D_2 spallation source
- Unpolarized UCN before the PPM and gate valve

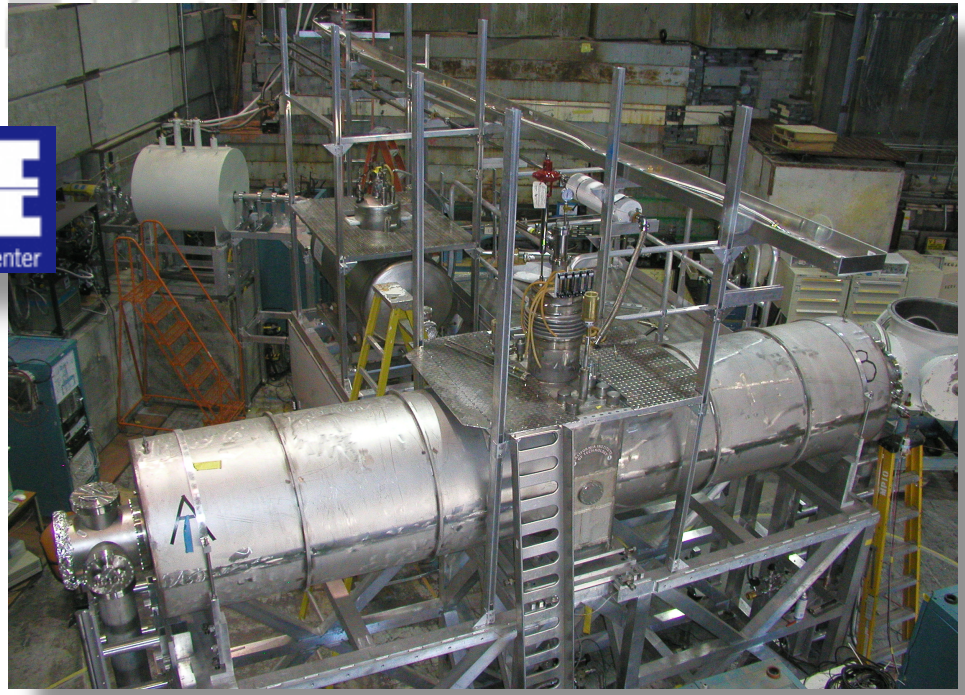

- Runs w/UCNA experiment
- ~20 UCN cm^{-3} at gate valve

Overview of UCNb

- Compact calorimeter
- Integrating "sphere"
- 2×2" PMT (up to 4)
- Near UCN source
- Sifts off main guide

size	12×12×12 cm
volume	1.73 L
area	864 cm^2
density	10 – 30 cm^{-3}
β rate	20 – 60 Hz

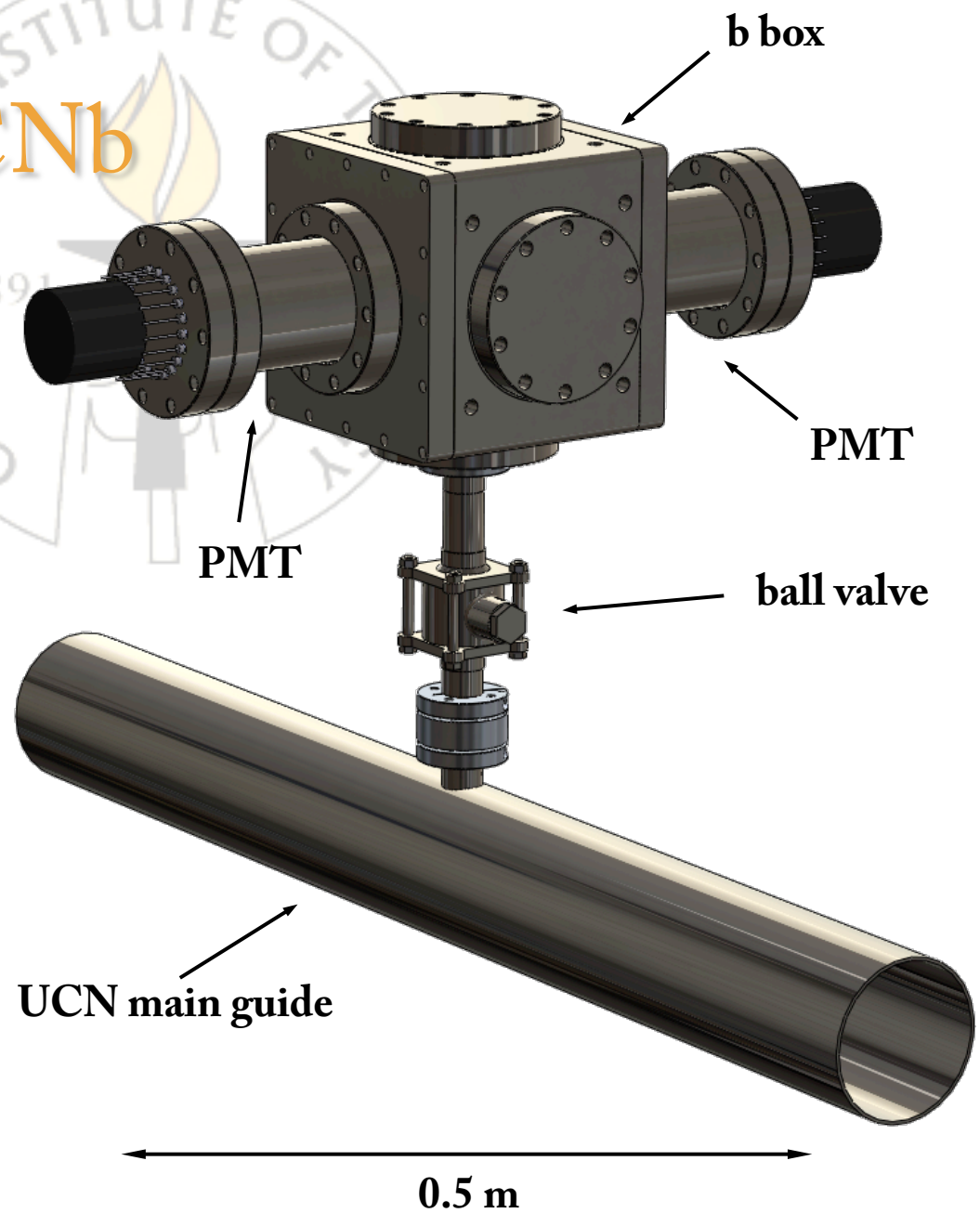

Overview of U

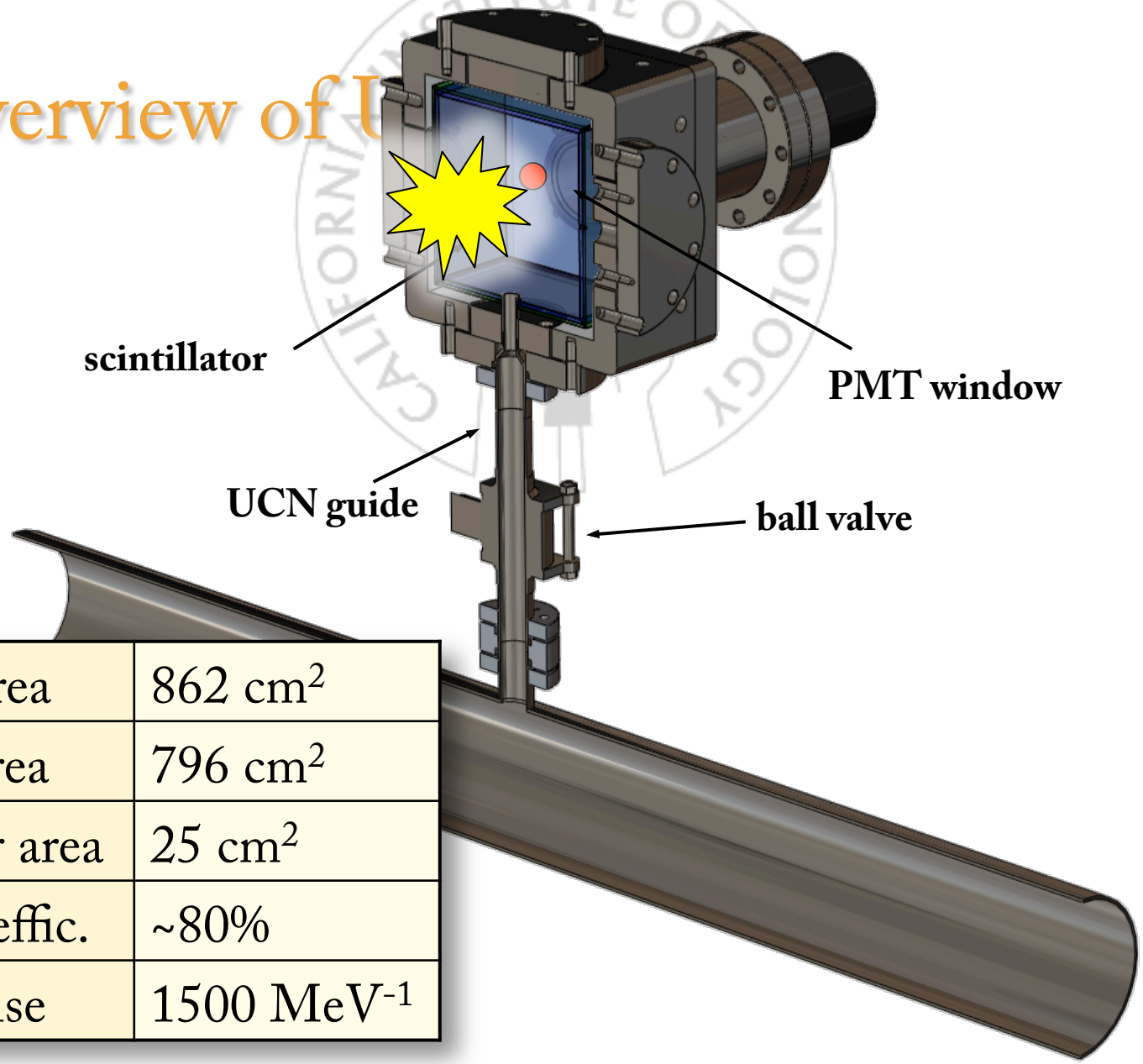

active area	862 cm^2
white area	796 cm^2
detector area	25 cm^2
optical effic.	~80%
shot noise	1500 MeV^{-1}

Scintillator sandwich

- UCN trapped by deuterated Polystyrene coating
  - UV scintillating layer ~200 μm thick
  - virtually no dead layer!
- Fast shifter in PS scintillator for beta energy (3 mm)
- Slow shifter in PS for muon/Compton background veto

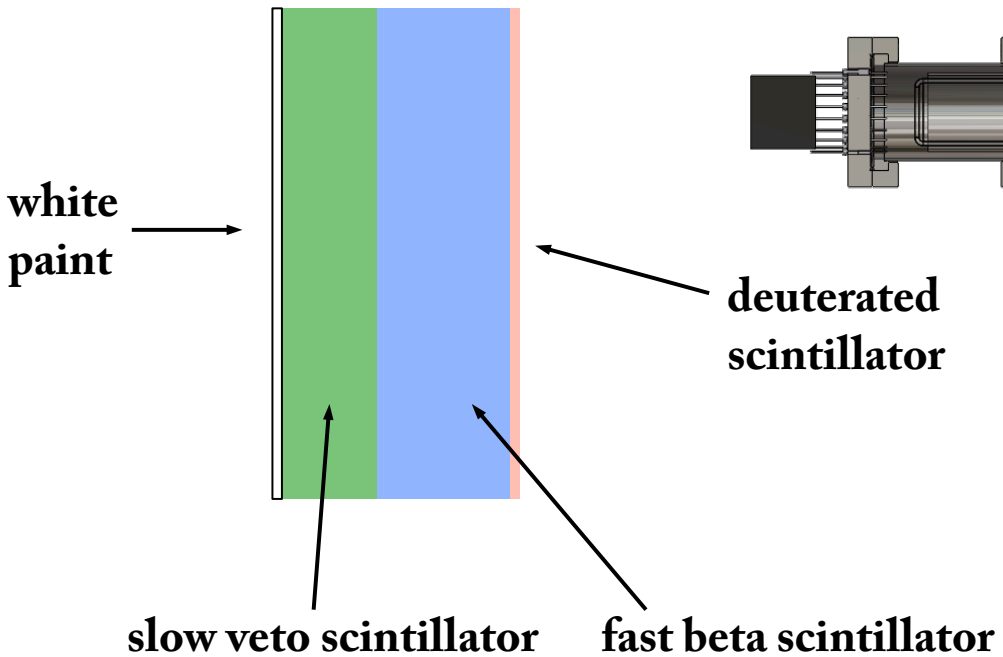

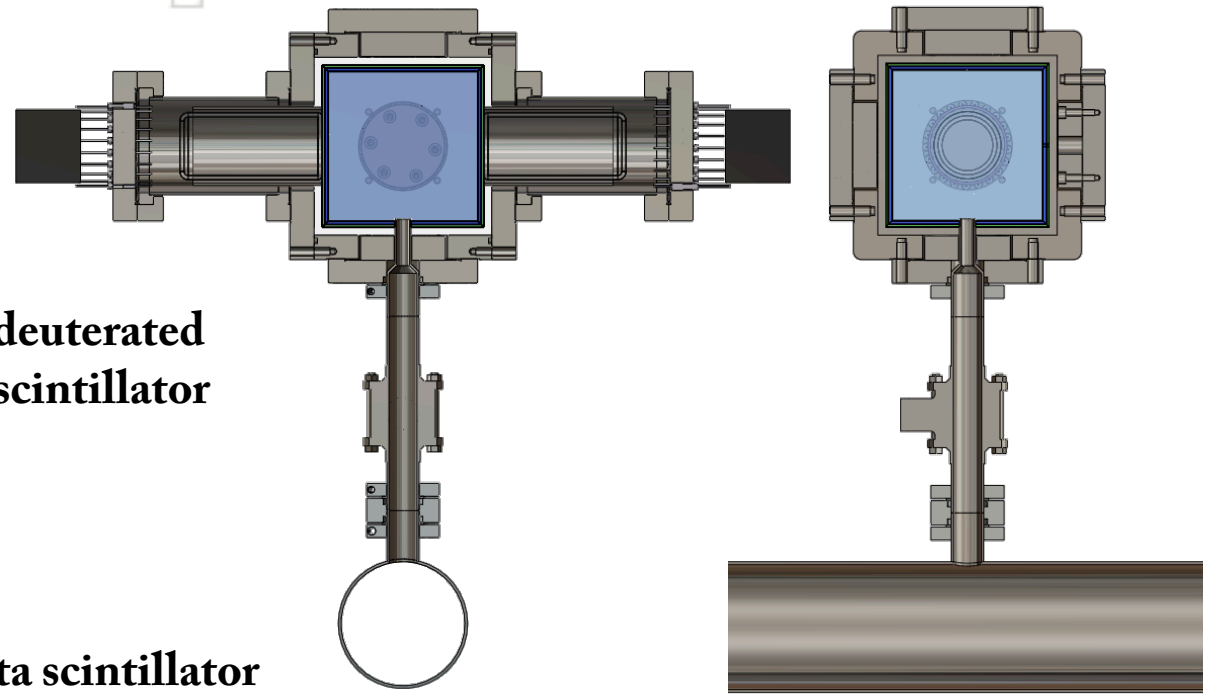

Run plan estimates

Year	2009	2010
Rate	30-60 Hz	30-60 Hz
Run time	10 days	60 days
Counts	10^7	$>10^8$
σ_b (stat)	3×10^{-3}	4×10^{-4}
σ_b (sys)	<1%	$<10^{-3}$
σ_b	1%	10^{-3}

Future UCNA upgrades to UCNB

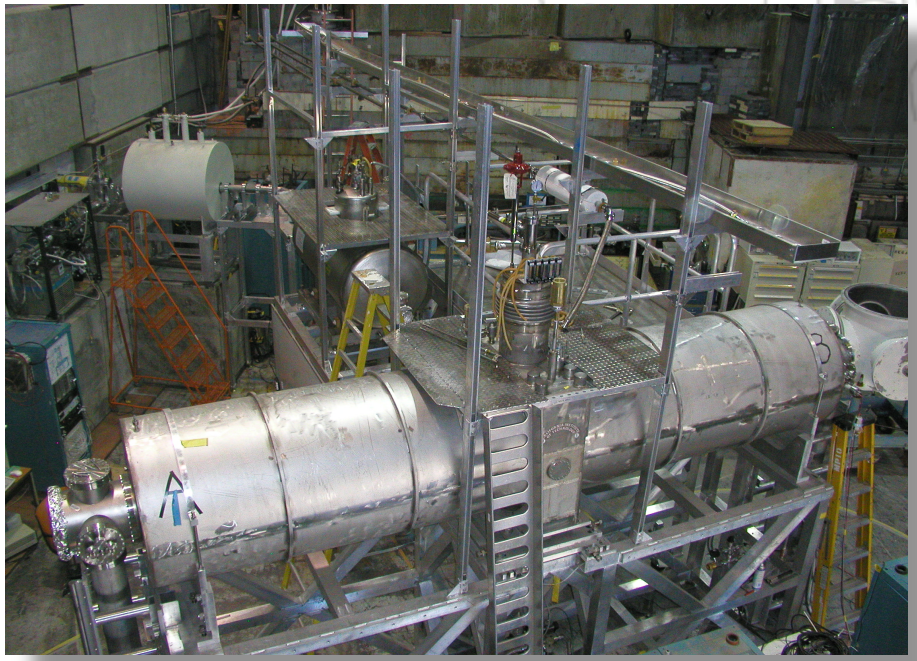

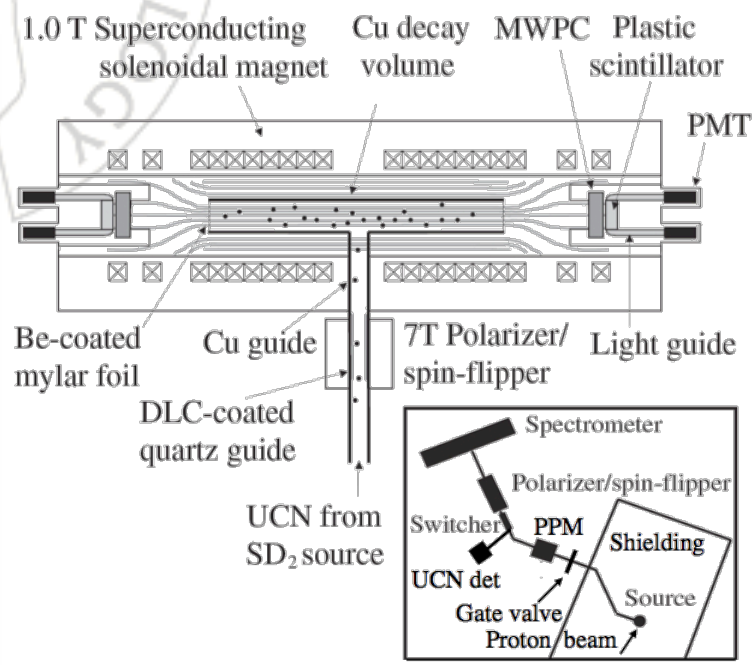

L.J.Broussard and J.C. Ramsey

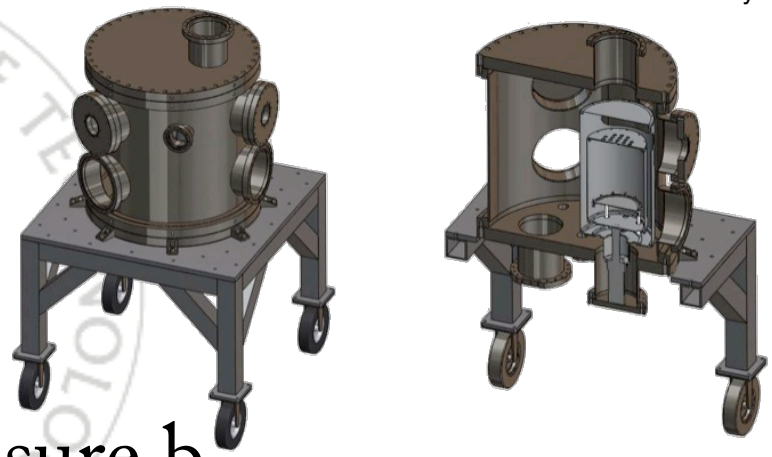

UCNB

- 2010 UCNA upgrade
- Hi-res Si detectors can measure b
- Proton-beta detection suppress background

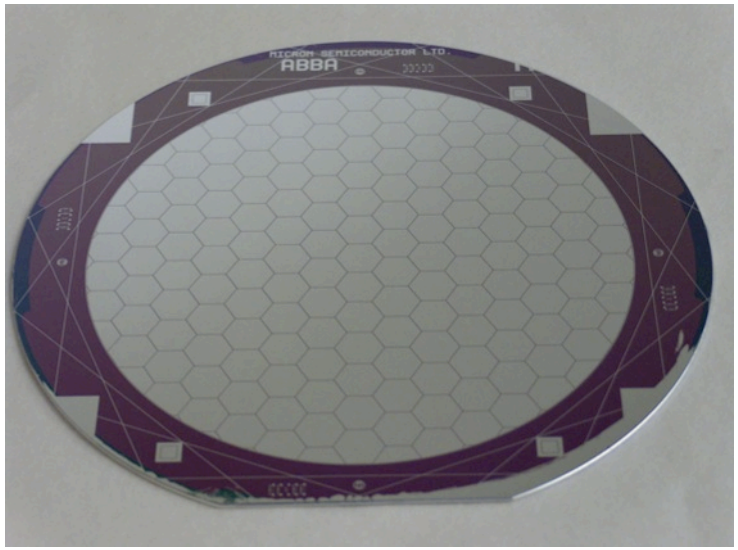

W.S.Wilburn

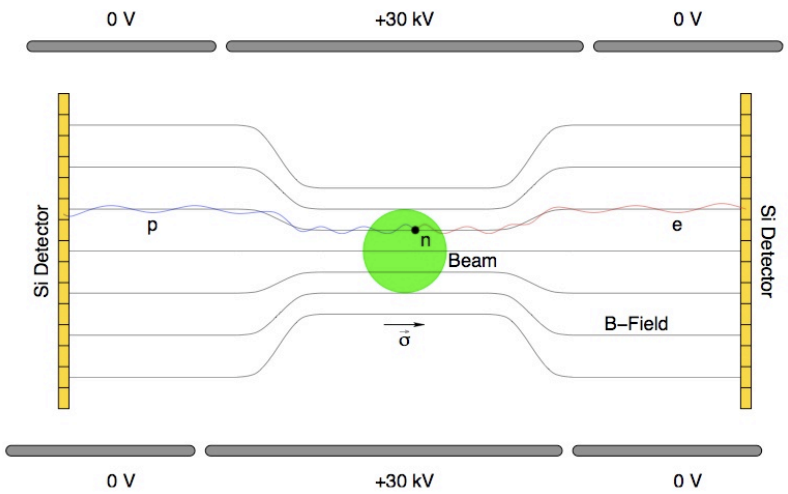

UCNb future upgrades

- Improved online source calibration
  - beam activated gases and source inserts
- Pb shield to suppress γ background
  - made possible by the compact size
- Hamamastu to help develop UBA PMTs
  - reduced shot noise (PE 3000 MeV^{-1})
  - higher QE (up to 40%)

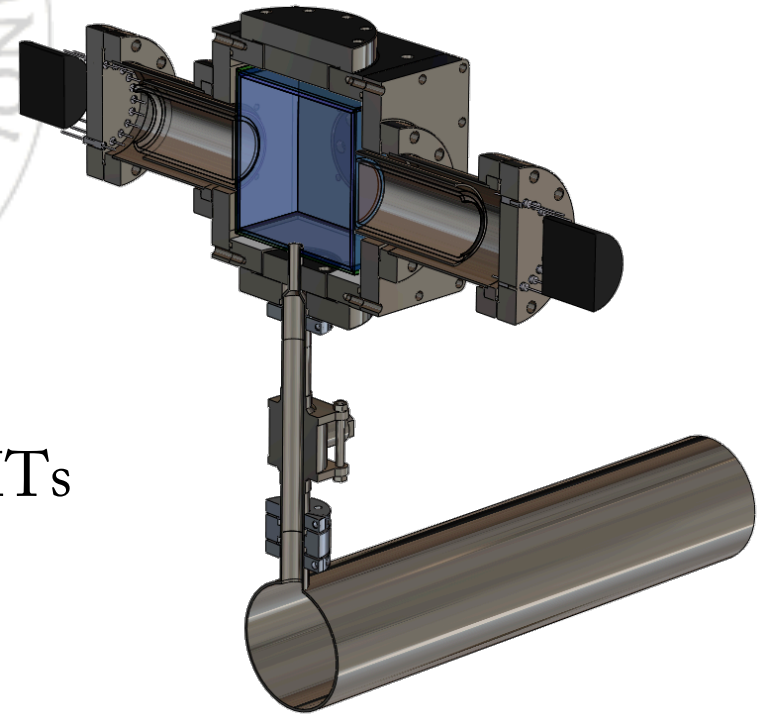

- Better understanding of systematics
  - 2009 run to help validate Monte Carlo and energy reconstruction
  - offline calibration with Kellogg 140 keV e-gun in early 2010

Future plans

- First UCNb run planed for Dec 2009
  - First measurement of little b for neutron
  - May extract b from 2008 & 2009 UCNA data
- Competitive with super-allowed b in 2010
- UCNaBA…b?
  - Upgrade to UCNB can measure b
  - High resolution Si detectors
  - May detect SUSY with b or B
- Gain insight into future little b designs using UCN

K. P. Hickerson[1], B. W. Filippone[1],
A. Young[4], R. Pattie[4], L. Broussard[2],
J. C. Ramsey[3], M. Makela[3], C. Morris[3], A. Saunders[3]

[1]California Institute of Technology
[2]Duke University
[3]Los Alamos National Laboratory
[4]North Carolina State University

Thank you for listening!