UCNTau: Study of Lifetime Measurement in a Magneto-Gravitational Trap

A. Saunders

The goal: to provide an experimental testbed to study the systematics involved in reaching a 0.1 s measurement of the neutron lifetime, and use it to make a 1 s measurement as part of the process.

UCNτ Collaboration:

S. Clayton, G. Hogan, M. Makela, C. Morris, J. Ramsey, A. Saunders, P. Walstrom, J. Wang (Los Alamos Nat'l Lab)

D. Bowman, S. Penttila (Oak Ridge Nat'l Lab)

E. Adamek, C. Cude, W. Fox, C.-Y. Liu, G. Manus, D. Salvat, J. Vanderwerp, S. Sawtelle, K. Solberg (Indiana U.)

K. Hickerson (Caltech)

A. R. Young, B. Vorndick (NCSU)

Magneto-Gravitational Trap

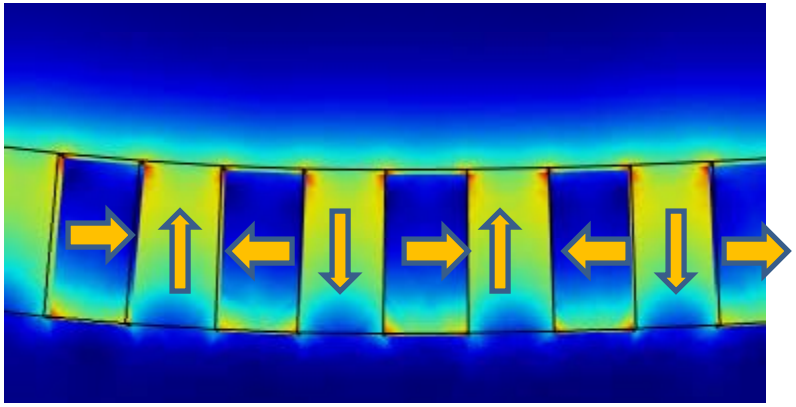

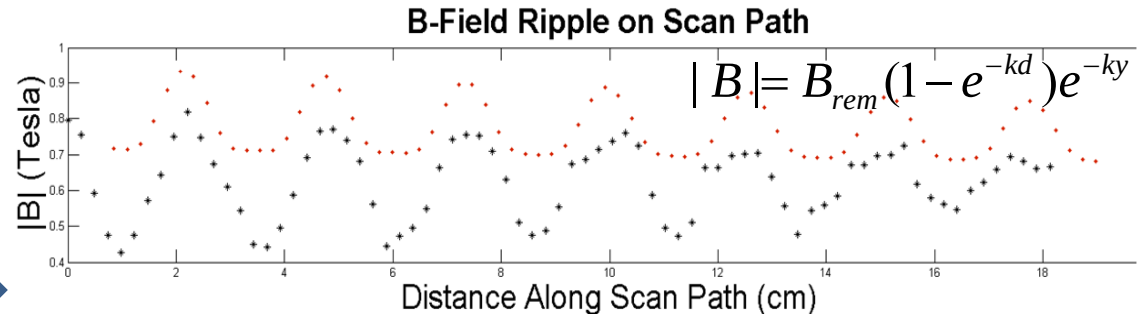

- **Halbach array** provides field (along η) gradient for magnetic levitation.
- **Window-frame electromagnet** provides spin holding field (β guiding field) along ξ.
- **Gravity** bounds UCN from the top.

PM Array **B** along $\hat{\eta}$

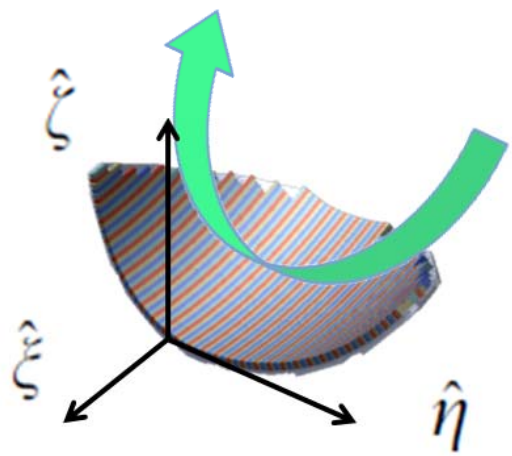

Local Surface Coordinates

Guide Coils **B** along $\hat{\xi}$

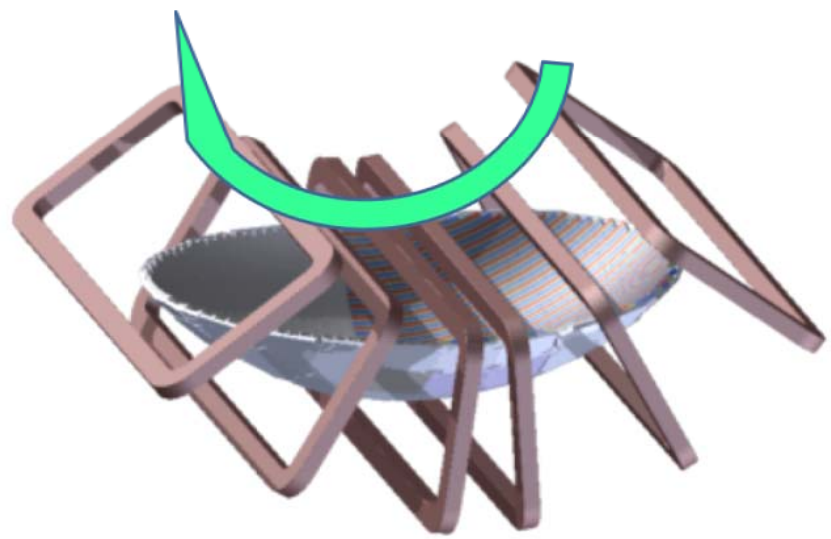

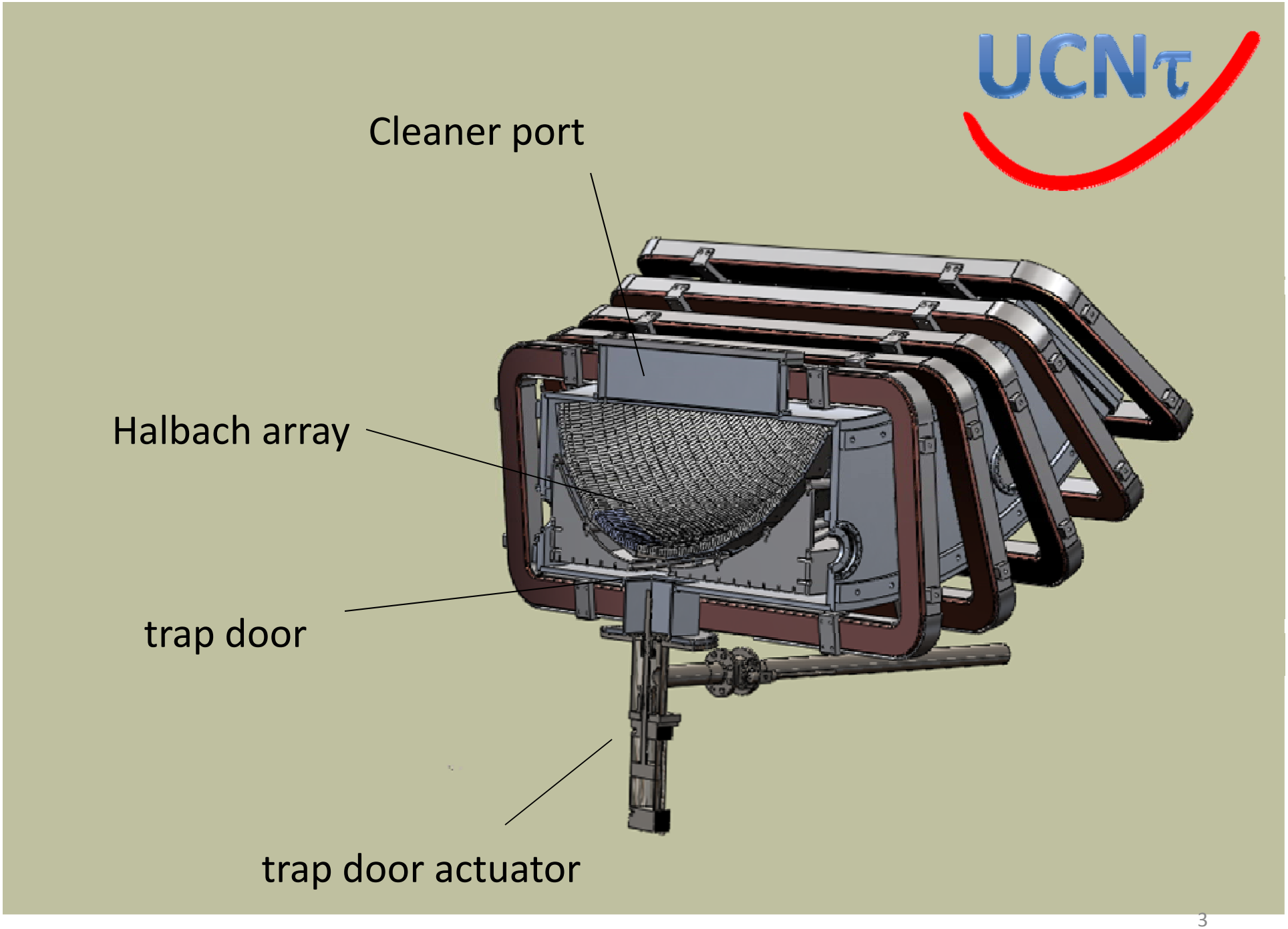
Cleaner port
Halbach array
trap door
trap door actuator

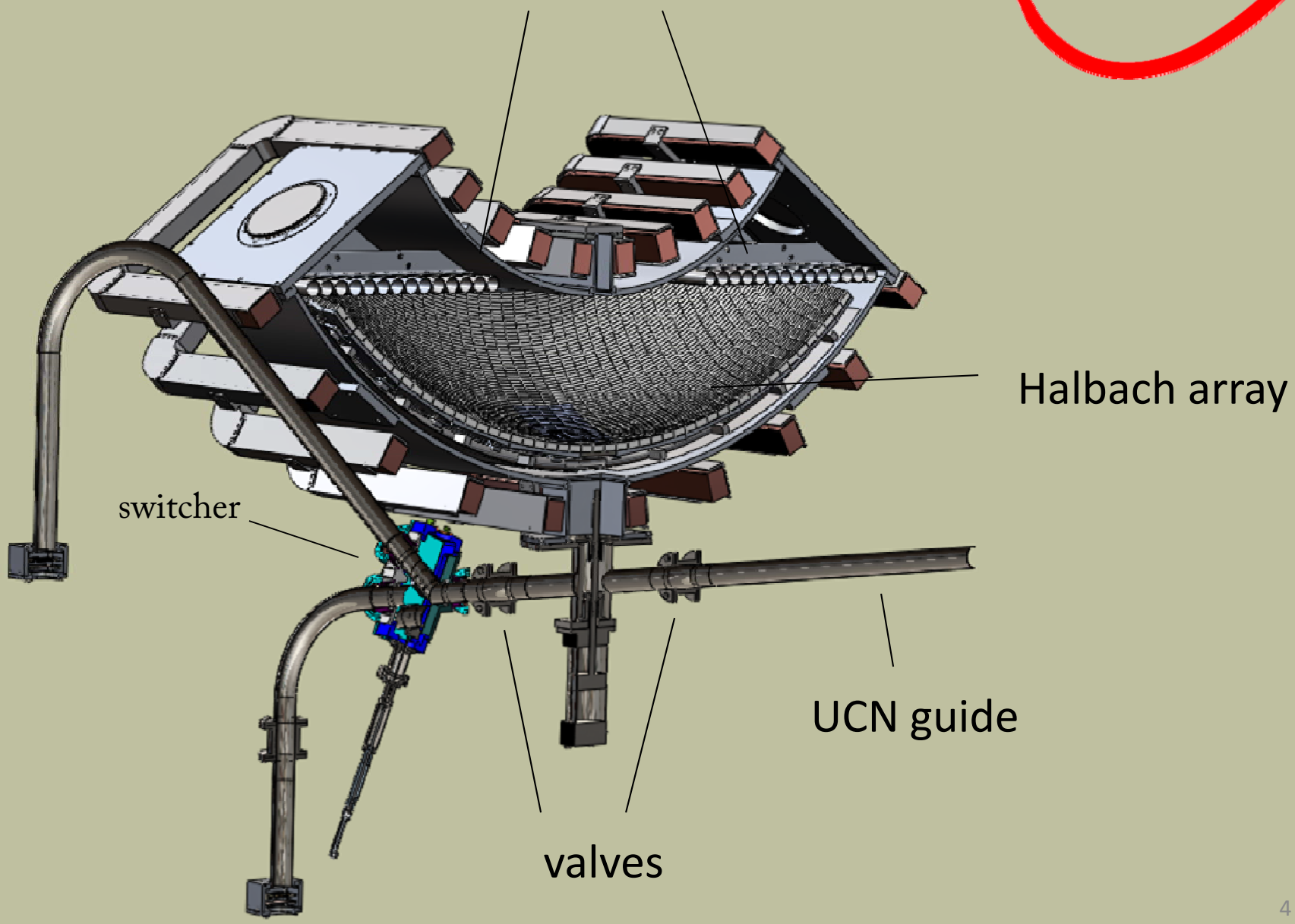
UCN detector tubes
Halbach array
switcher
UCN guide
valves

Systematic Effects to be Studied with Prototype

- Phase space
  - Quasi-bound orbits
  - Phase space independent detection
- UCN spectral effects
  - Monitor accuracy
  - Cleaning efficiency per height
- Unexpected UCN losses
  - Spin flips: field zeroes, non-adiabiticity
  - Residual gas
  - Vibrations
  - Weak spots in Halbach array
- Detector effects
  - Efficiency
  - Position dependence
  - Gain effects, thresholds
  - Backgrounds: natural, proton-generated, UCN-generated

Asymmetric Trap → Mixing Phase Space

• **Low symmetry** (together with **field ripples**) induces states mixing between circular orbits, through chaotic motion (or not).

• Leads to **quick cleaning** (~ seconds) of the quasi-bound UCN with large tangential velocities.

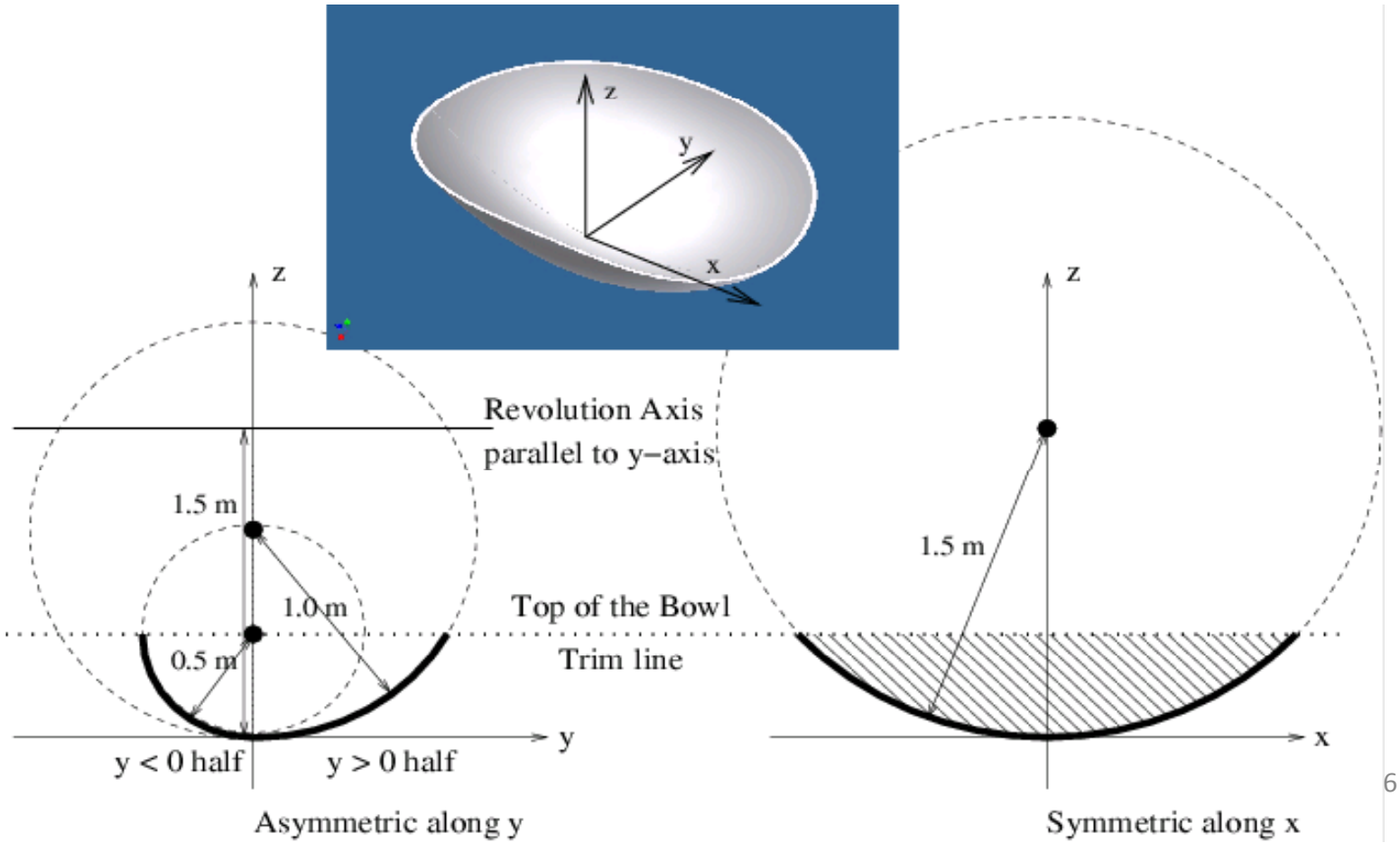

R&D: Monte-Carlo Simulations on Neutron Tracking

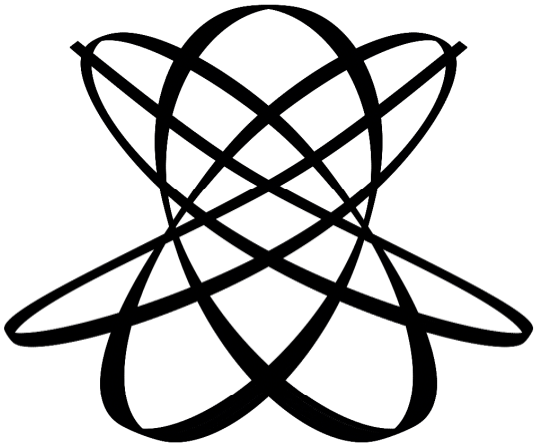

Questions:

- Phase Space evolution.
- Detection efficiency as a function of time
- Chaotic trajectory or not?

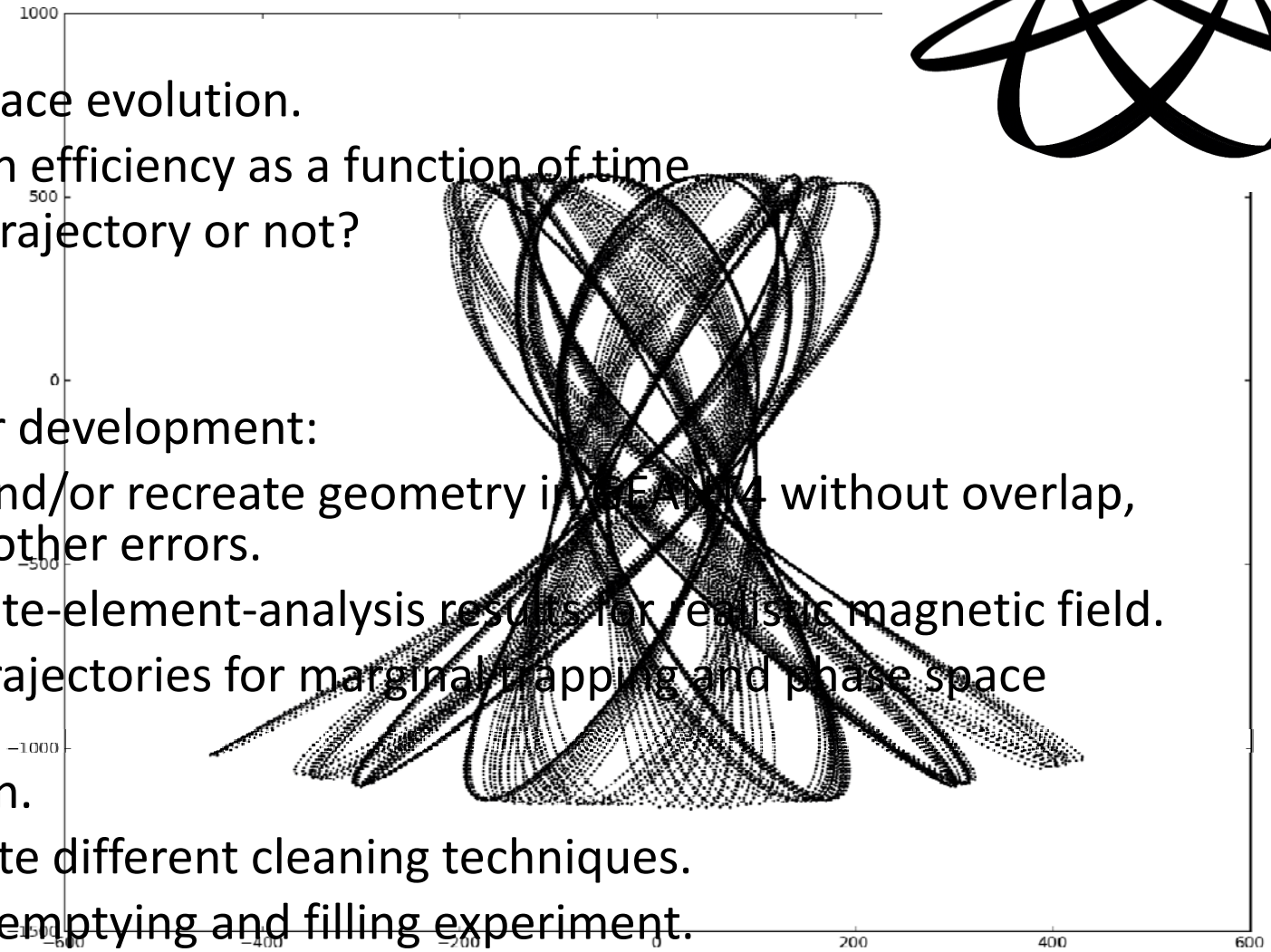

Tools under development:

- Import and/or recreate geometry in GEANT4 without overlap, gaps, or other errors.
- Input finite-element-analysis results for realistic magnetic field.
- Collect trajectories for marginal trapping and phase space analysis.
- Track spin.
- Investigate different cleaning techniques.
- Perform emptying and filling experiment.
- Perform β detection experiment.

Transport Simulation

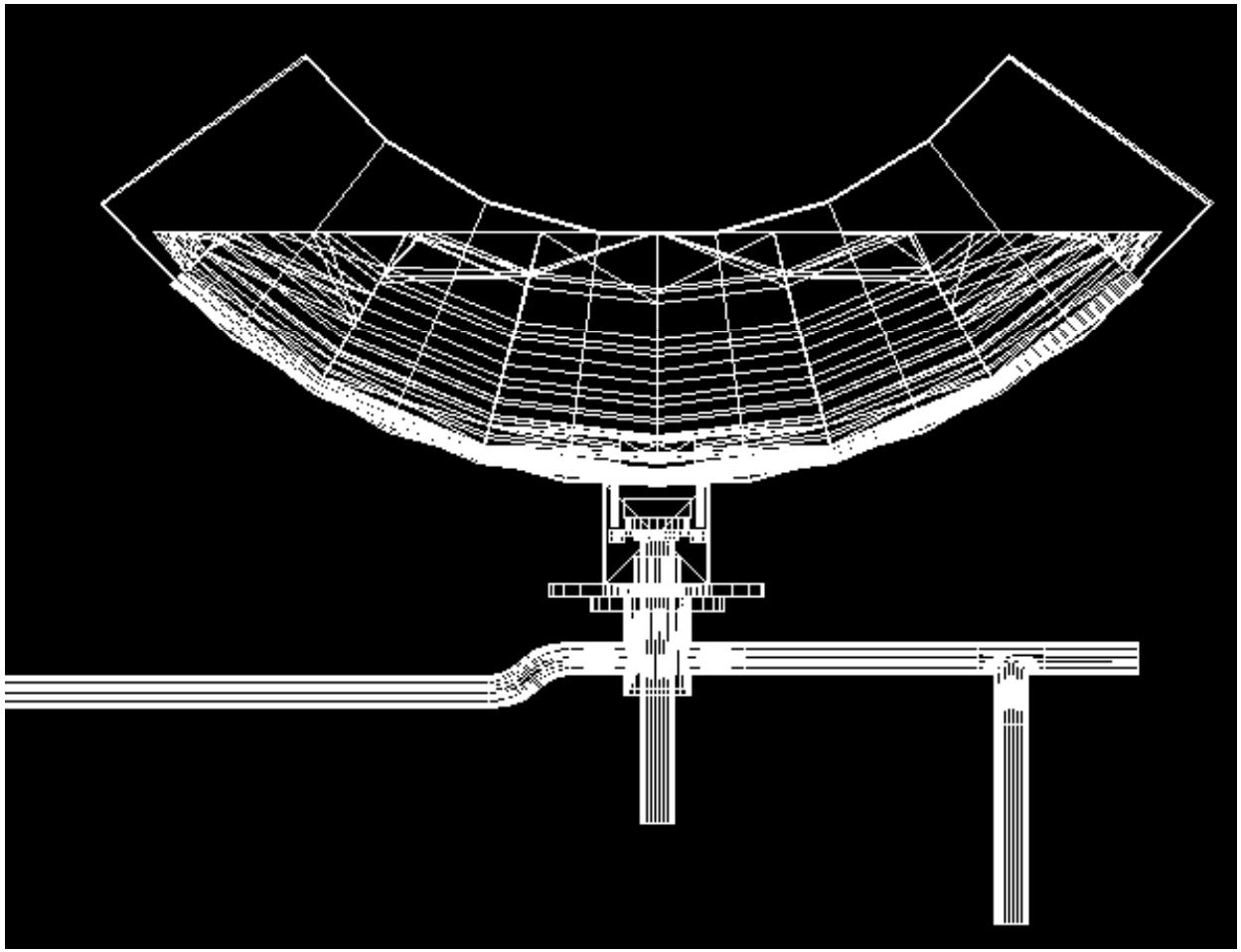

GEANT4 in feed guides
Home brew in trap

Does not yet track UCN spin

Tracks equations of motion
modeled magnetic field

Example: rapid mixing of phase space

- 0 s

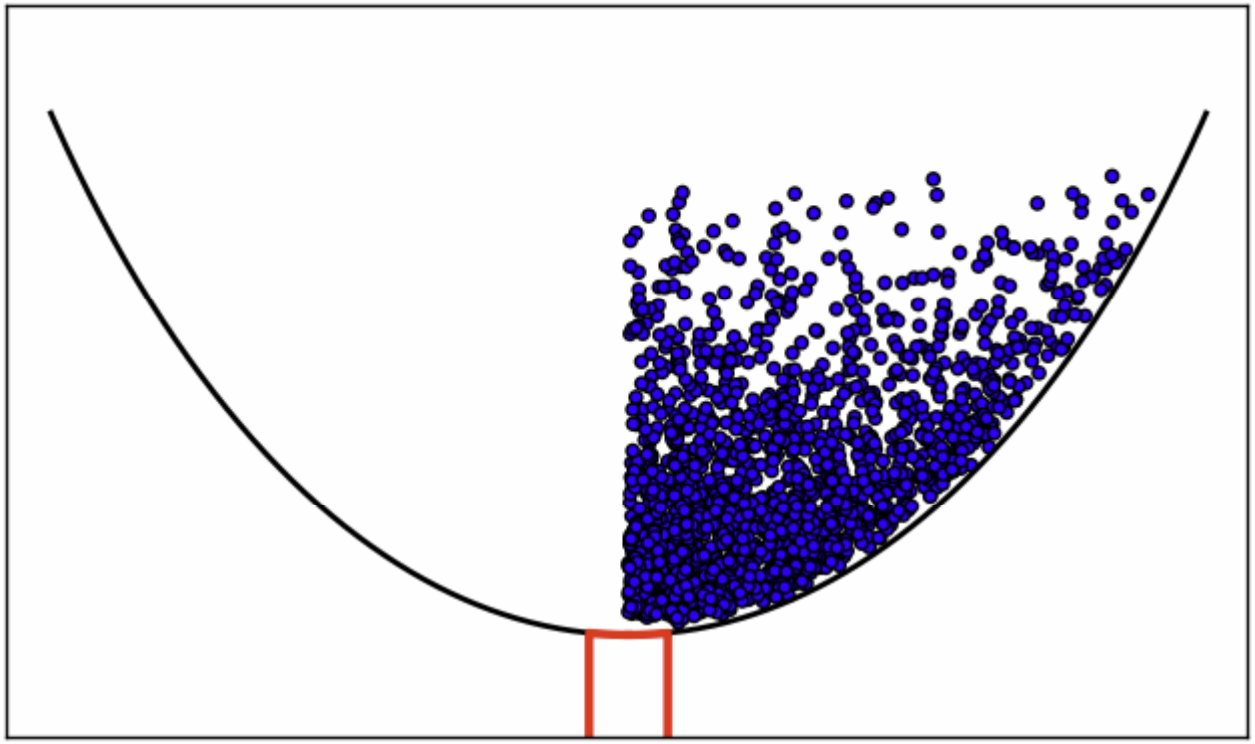

- 1 s

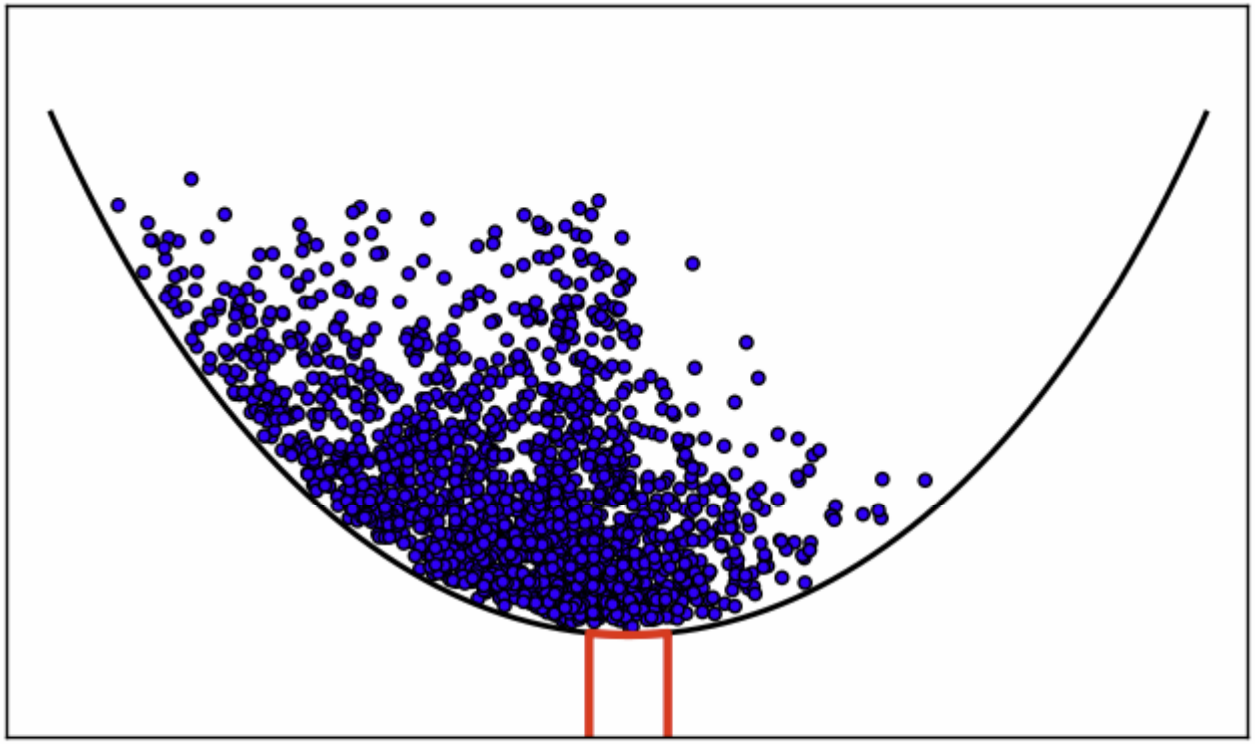

- 2 s

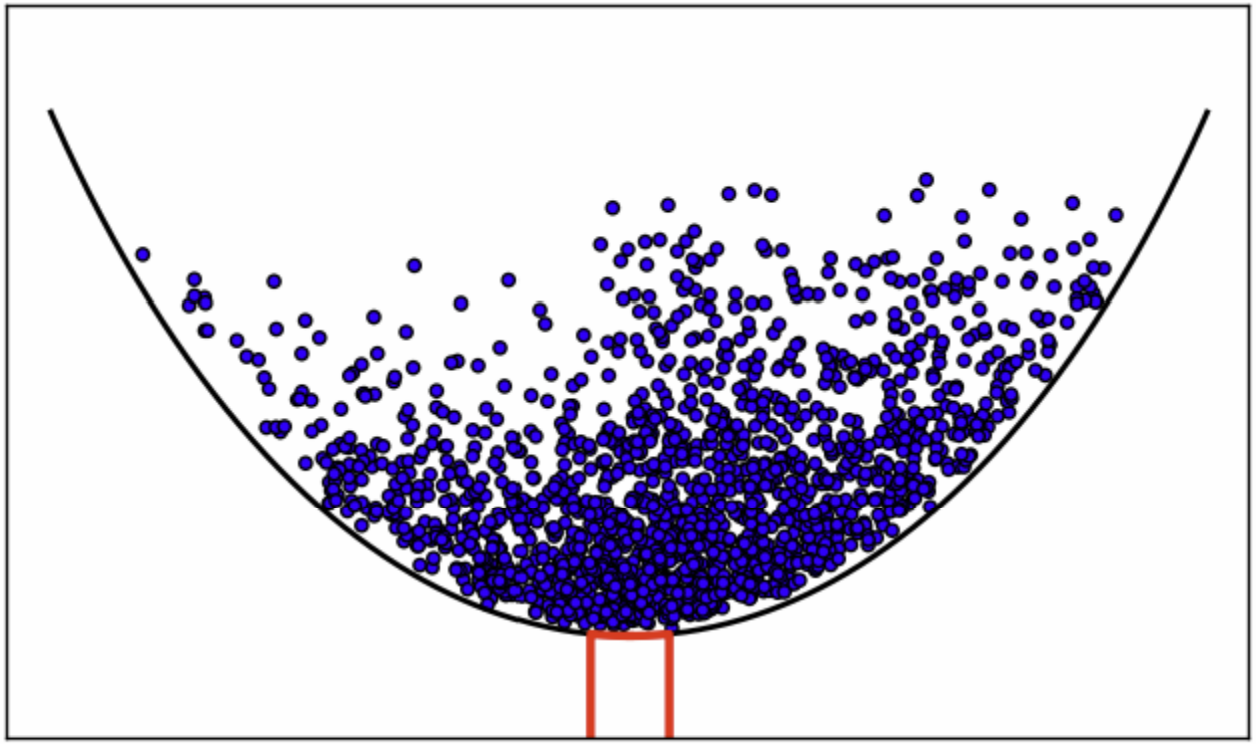

- 3 s

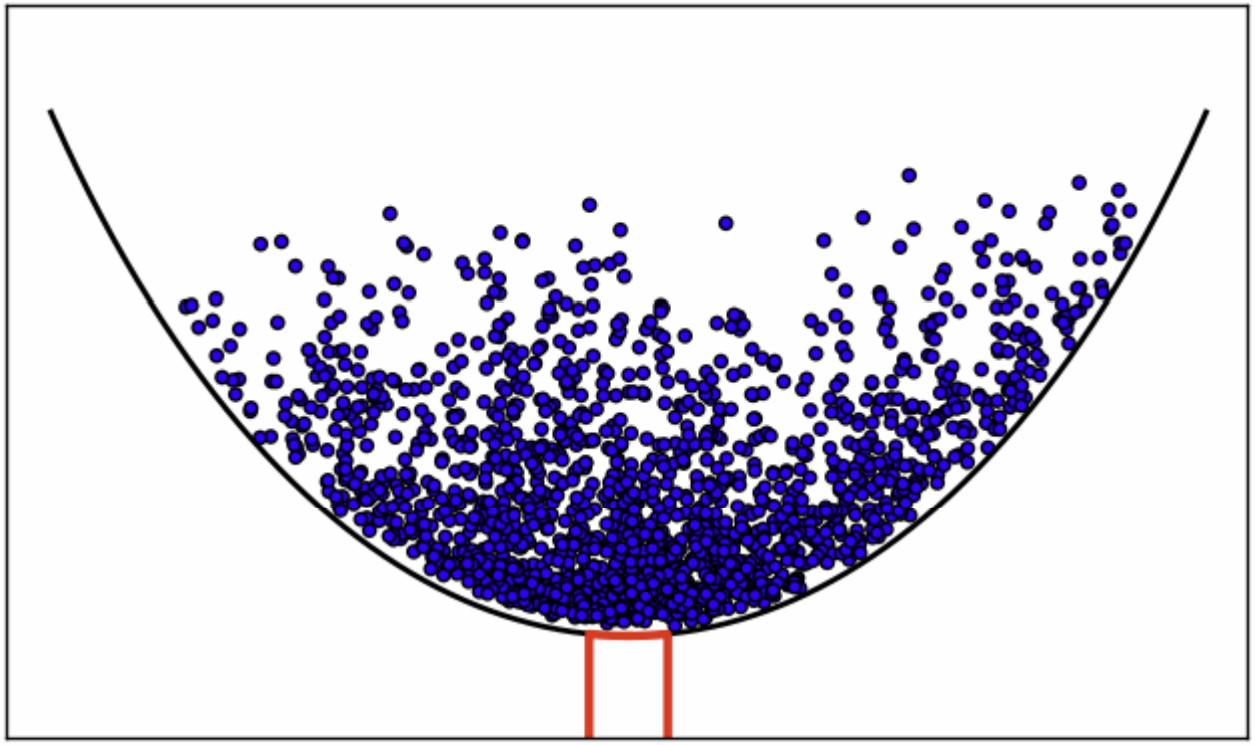

In-Trap Simulation

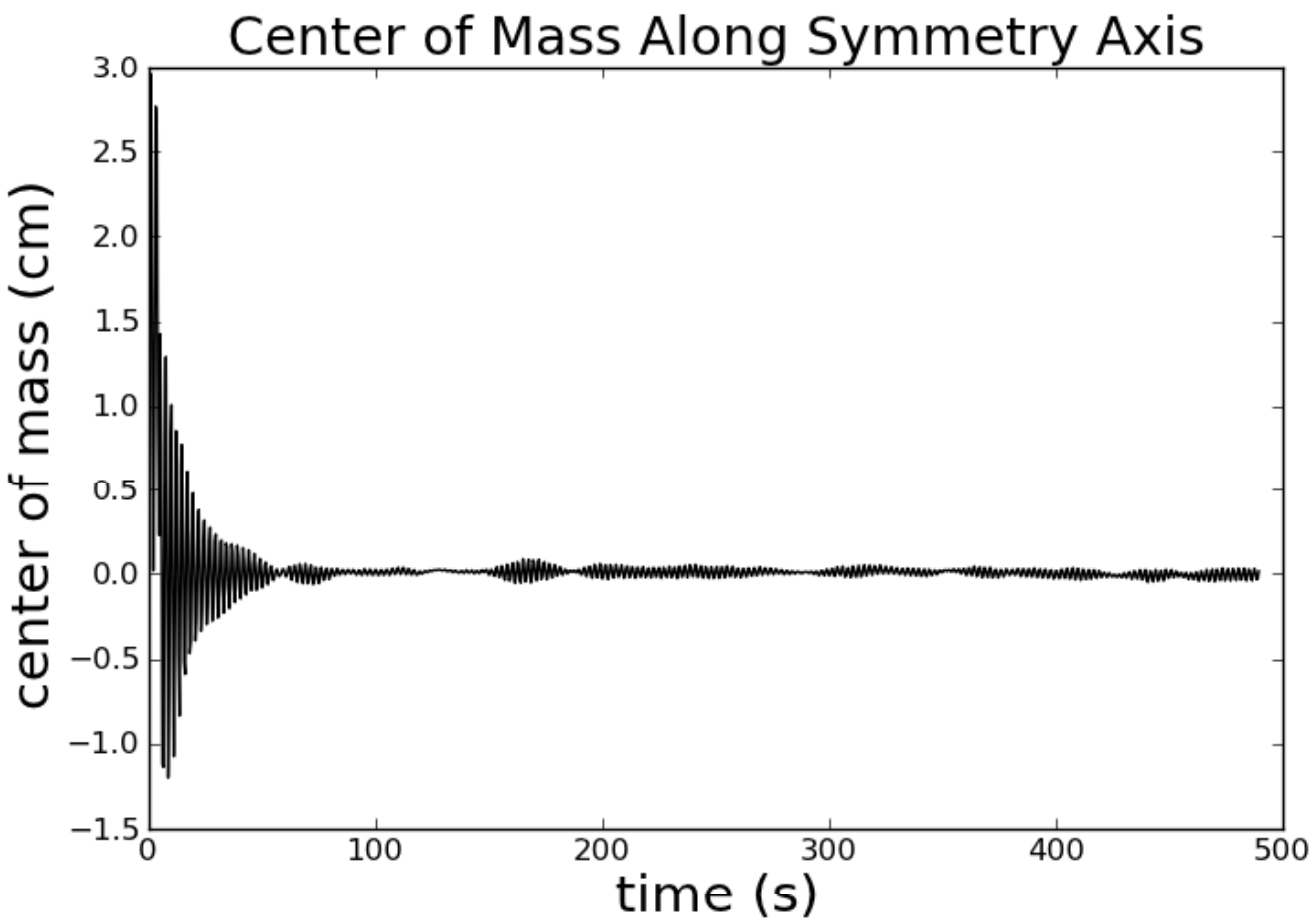

Horizontal cleaner eliminates marginal UCNs (in simulation!)

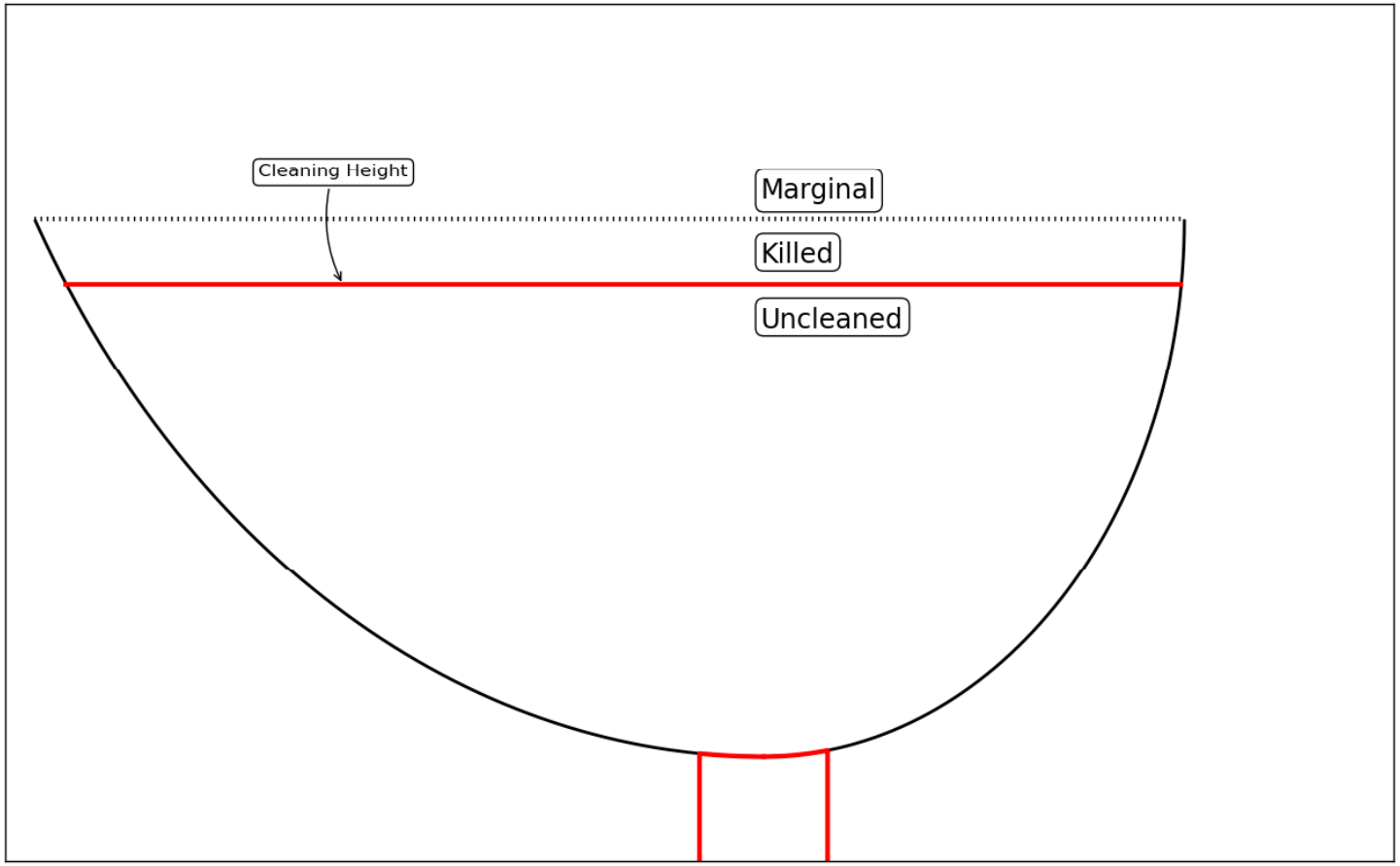

Cleaning Time

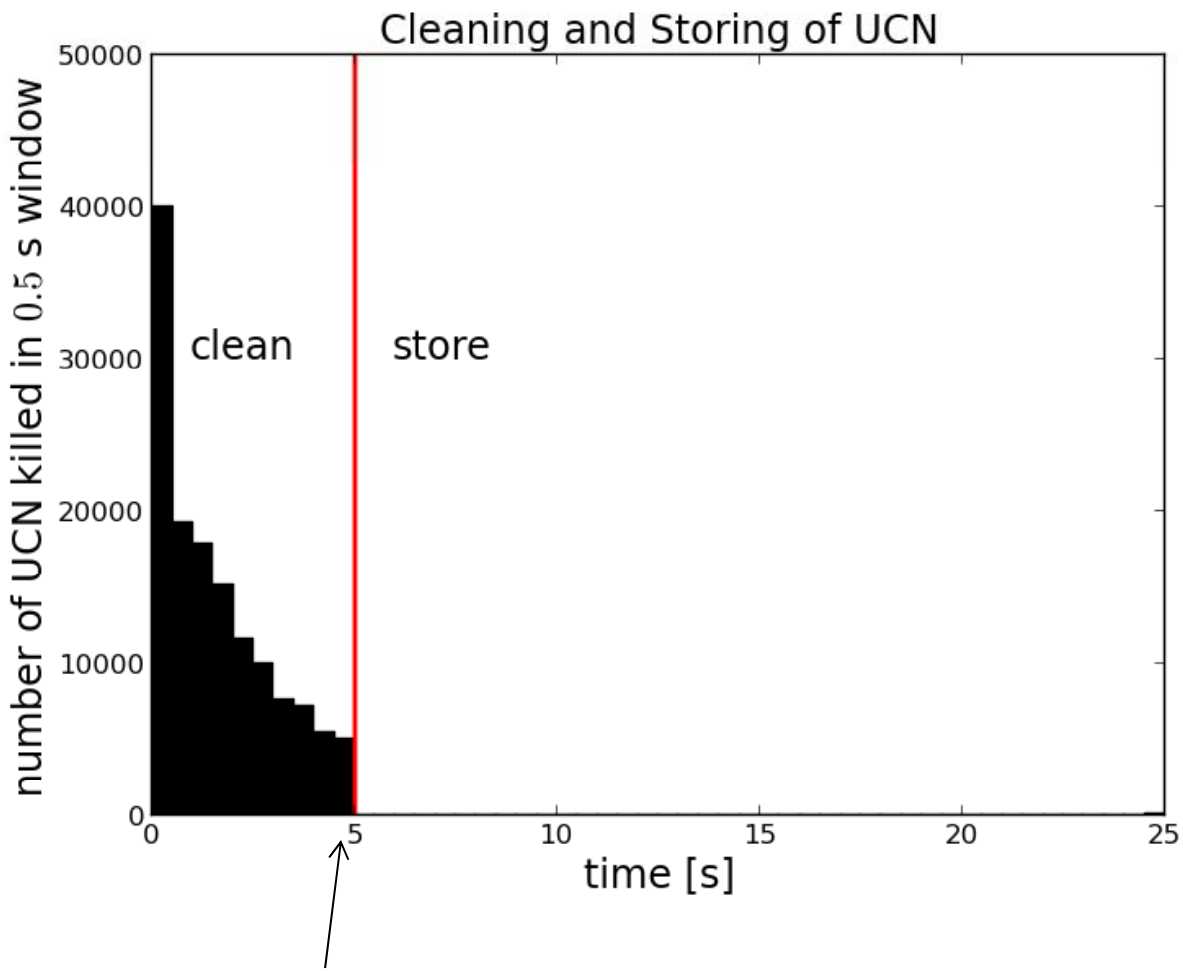

Remove cleaner here

A variety of measurement schemes to detect neutron β-decay

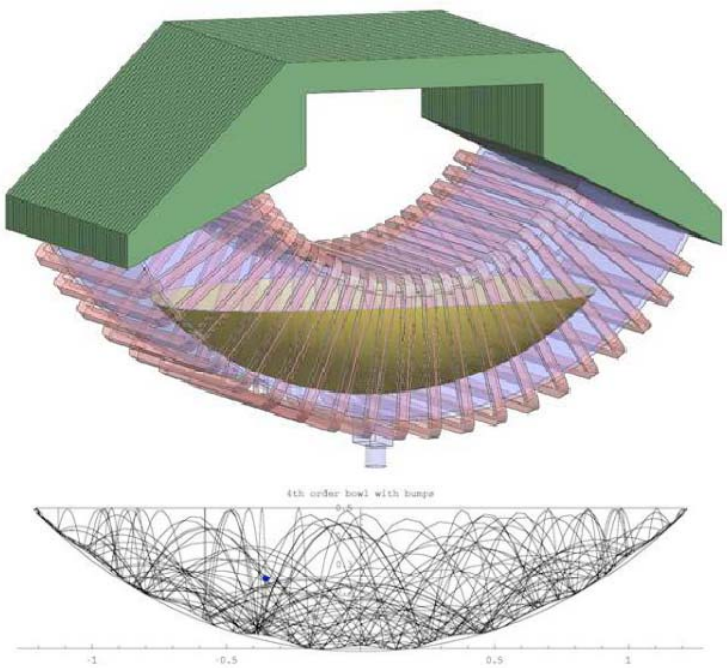

1. **Detect decayed βs** in real time.
   - Decay betas are guided along the guiding fields into beta detectors mounted at the two ends.
   - Require at least 0.1 T of holding fields.
2. **Measure survival UCN** by draining the UCN into a UCN detector mounted on the bottom of the trap.
   - The UCN draining efficiency depends on the storage time and the UCN spectrum evolution.
   - Susceptible to phase space evolution during long (~200 s) draining time.
3. **Pump & Dump**
   - Convert the lifetime trap into **an ionization chamber detector** on demand.
   - Avoids the time-dependent detection efficiency.
   - Use BF_3/Ar gas mixture.
4. **Proton collection and amplification**
5. **Vanadium dagger**

R&D: Vanadium solid state detector

Neutron scattering lengths and cross sections							
Isotope	conc	Coh b	Inc b	Coh xs	Inc xs	Scatt xs	Abs xs
V	---	-0.3824	---	0.0184	5.08	5.1	5.08
50V	0.25	7.6	---	7.3(1.1)	0.5	7.8(1.0)	60.(40.)
51V	99.75	-0.402	6.35	0.0203	5.07	5.09	4.9

Negative UCN potential

Good UCN absorber

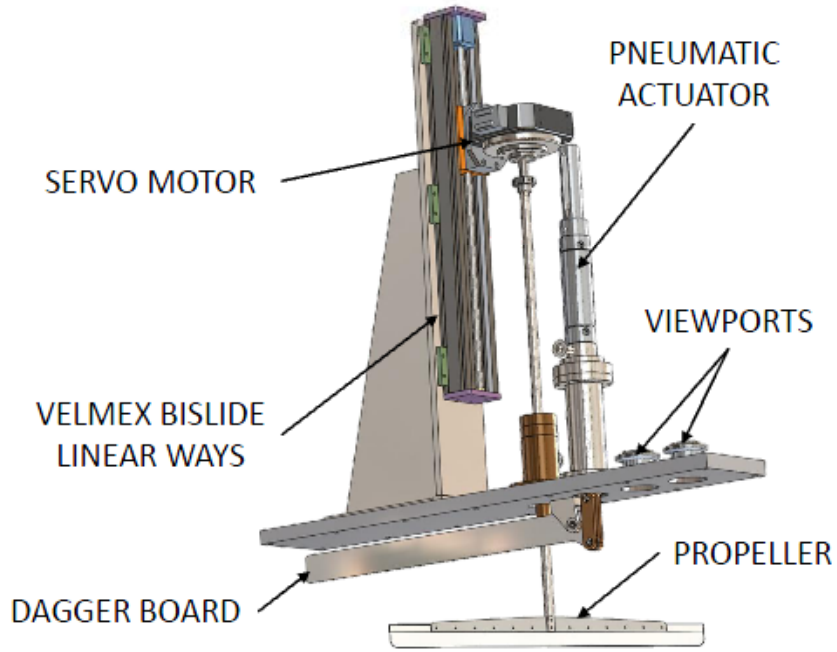

$^{50}V + n \rightarrow {}^{51}V$ (stable)

$^{51}V + n \rightarrow {}^{52}V \rightarrow {}^{52}Cr + \beta^- + \gamma$ (100%)

1. Insert vanadium foil to absorb neutrons
2. Extract foil into shielded counter
3. Perform β-γ coincidence measurement.

β : 1.073 MeV , γ : 1.4 MeV

$T^{1/2}$ = 3.743 m

Use several detectors to get position information on UCN distribution inside the trap.

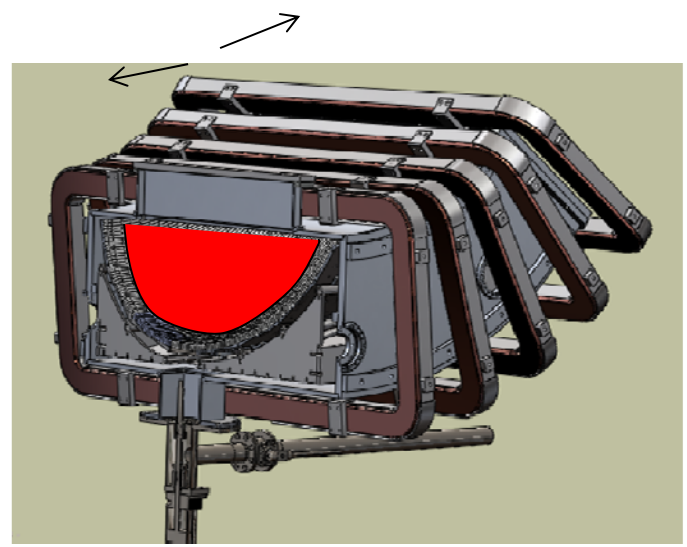

V Measurement sequence

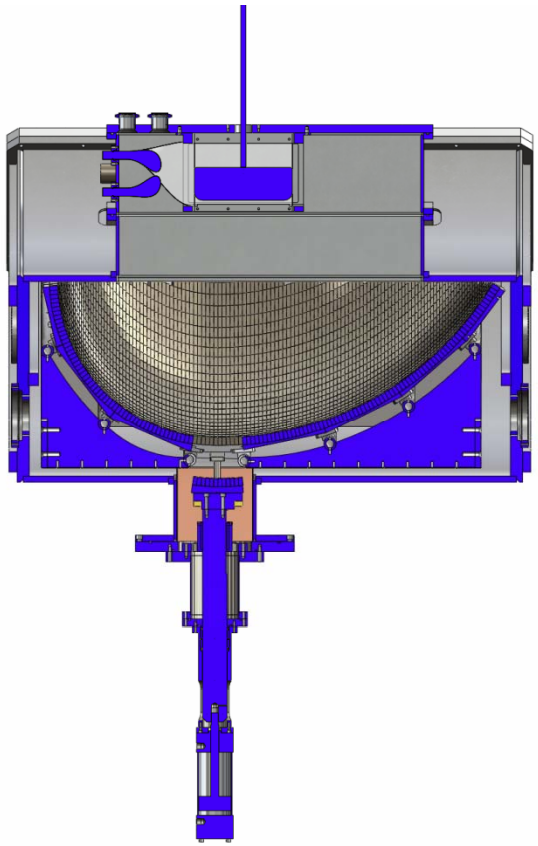

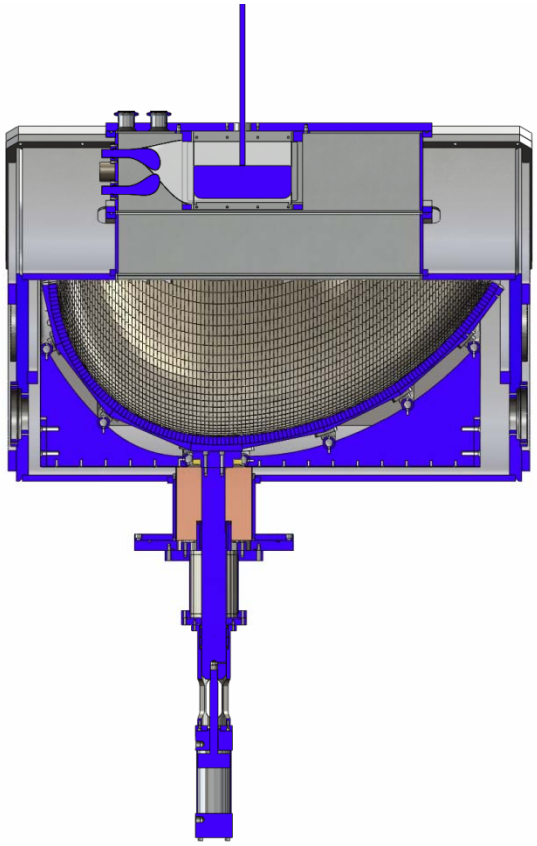

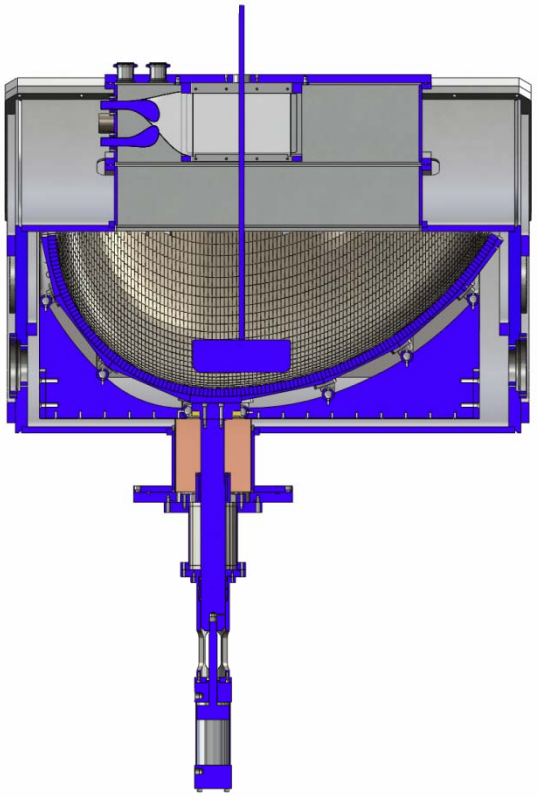

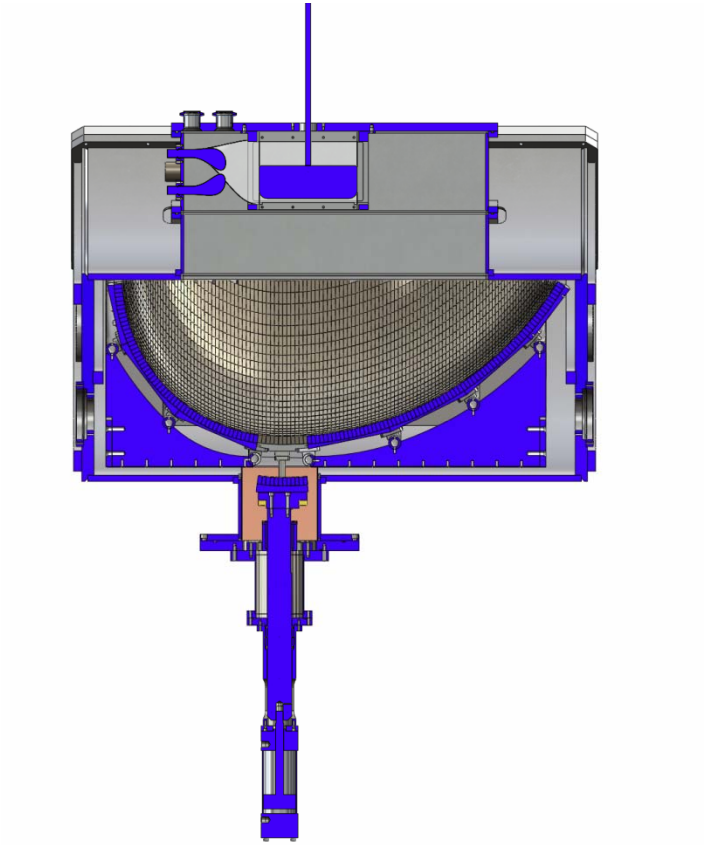

Demonstration of Vanadium activation and Counting of UCN

Vanadium Counting Setup

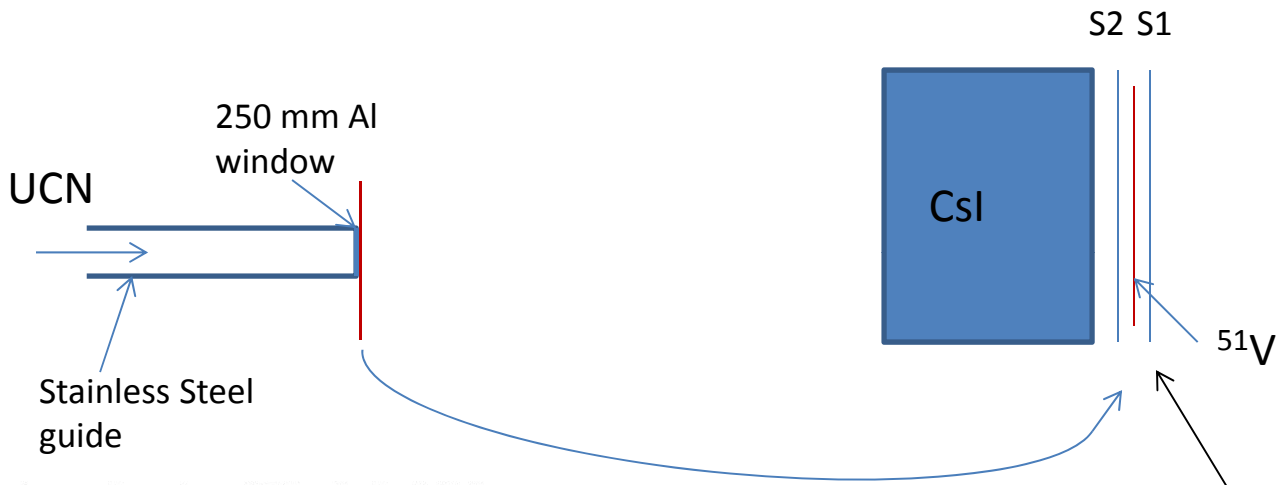

Expose for ~10 minutes
Hand carry to counter
Installed between S1 and S2

2 m

HpGe

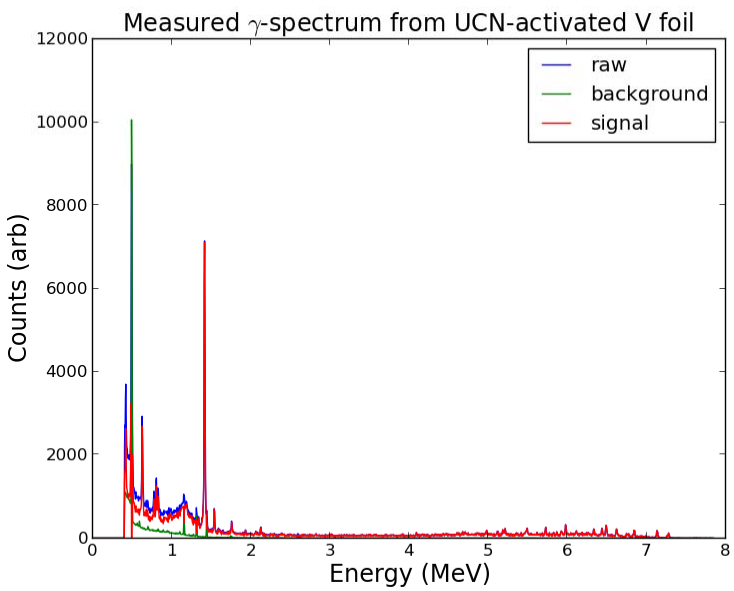

51V+n→52V(T1/2=3.74m

52V →52Cr+ β^-+γ(1.434 100%)

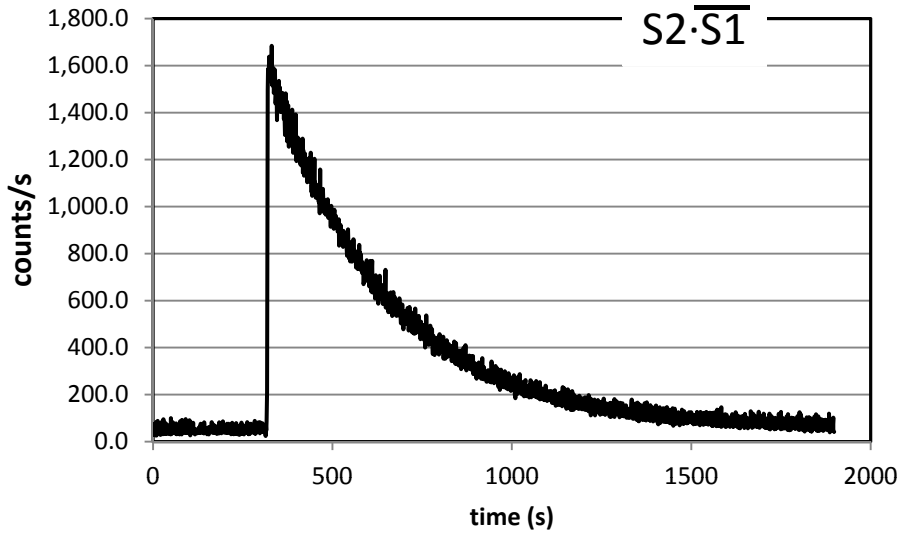

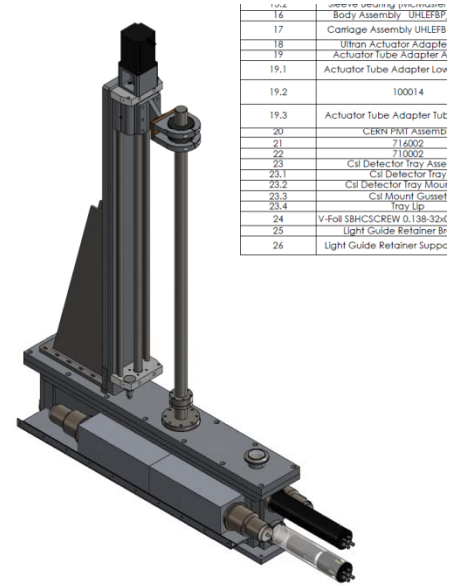

	peak rate	background	net		
CsIsingles	1542	692	850	electron eff	gamma eff
Csi.(s1.or.s2)	445	9	436	0.512941	0.280206
(S1.or.S2).(S1.s2Bar)	1598	42	1556		

	S/N
CsI	1.8
S2	9.7
CsI·S2	31.0

- Betas provide a clean signal with low background
- The background in the CsI detector is considerably higher
- Detecting the γ and β in coincidence provides excellent background rejection

Relative UCN flux monitoring: preliminary measurements

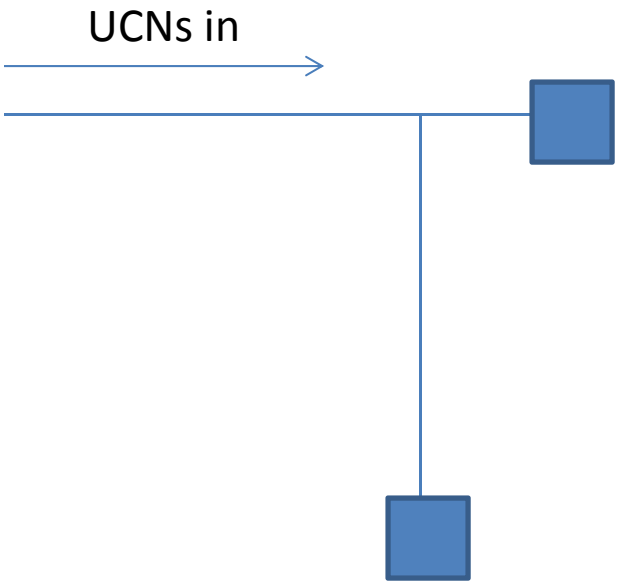

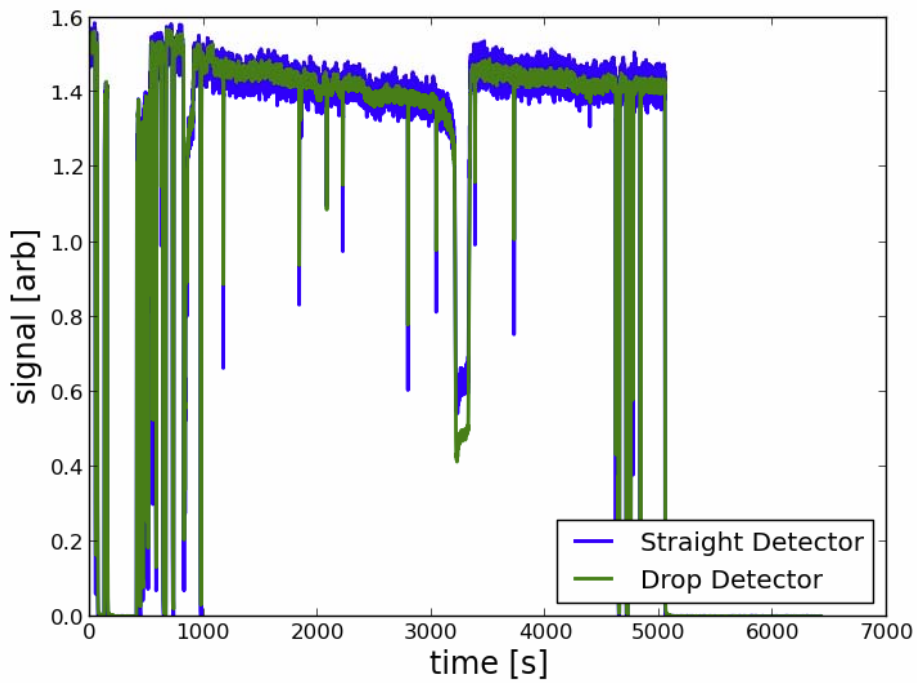

UCN Facilities

- LANL source (available now, with best performance ever).
  - 80 UCN cm^{-3} at the gate valve.
  - Beam sharing with UCNA,B experiment.
  - 200 s fill, followed by a 1 hour measurement (6% duty).
  - Can run simultaneously with UCNA by filling while UCNA measures background.

- PSI source (commissioning).
- Pulstar source (commission this year?).
- TRIUMF source (funding secured this year, construction?)

UCN Source in Area B at LANSCE

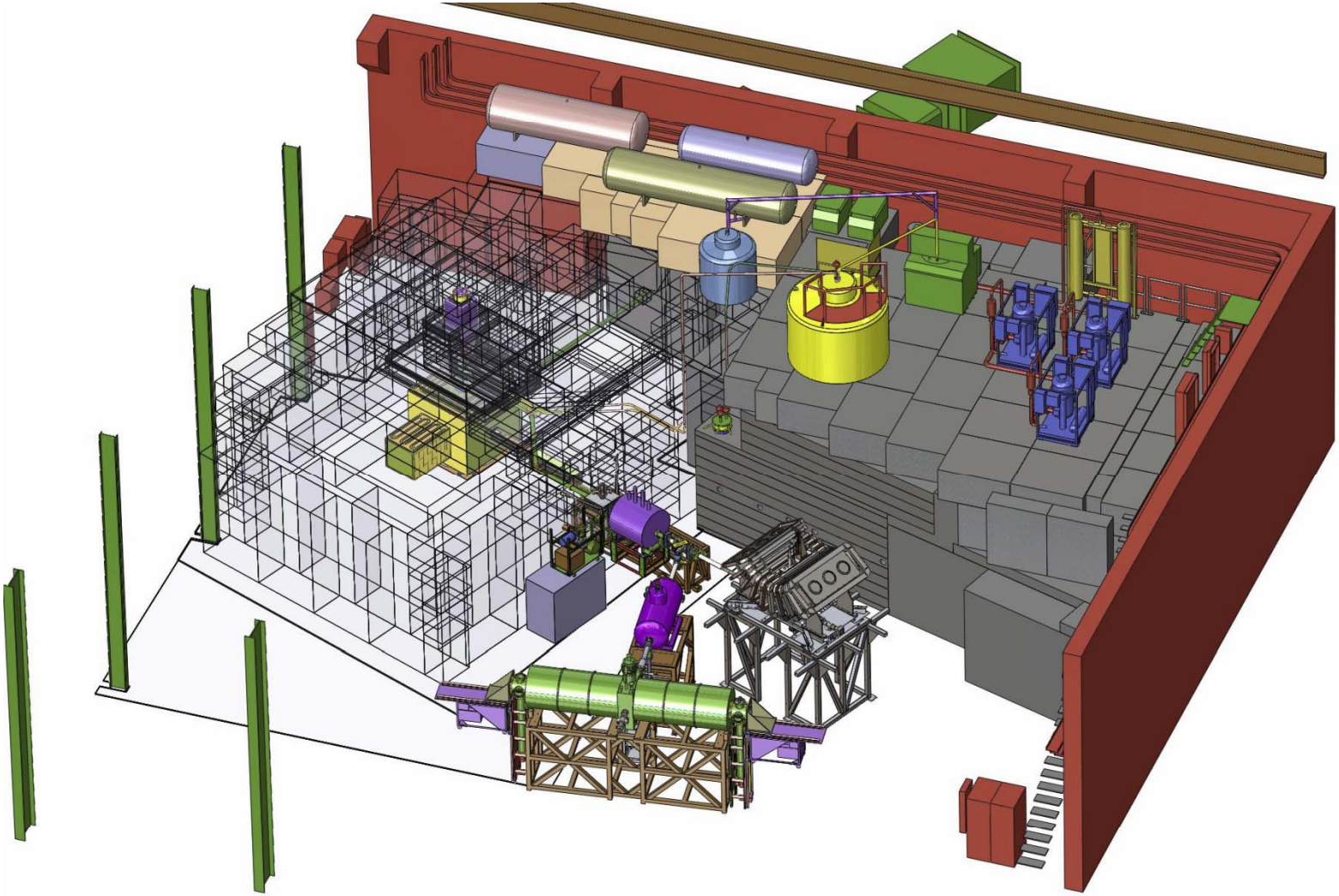

Timeline

- Complete Halbach array and holding coils (2012)
- Offline monitoring tests (Q3/Q4 2012)
- Install low-field spin-flipper (2012)
- Comprehensive simulation (2012-)
- Preliminary storage measurement, systematics studies
  - cleaning/marginal trapping
  - demonstrate vanadium technique
  - source fluctuations/monitoring
- Use measurements to understand/control systematics, push towards next gen. experiment

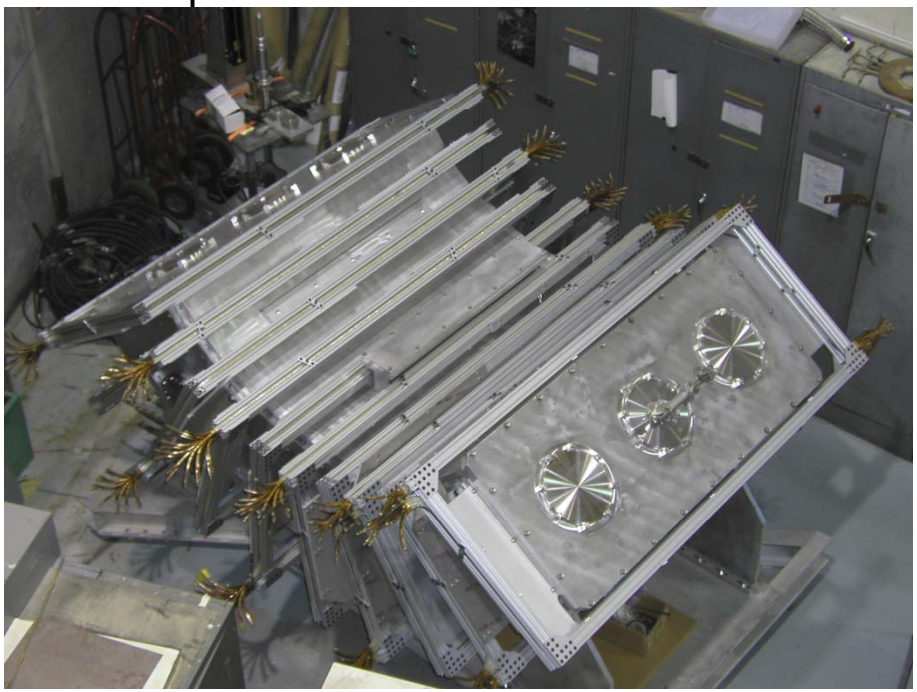

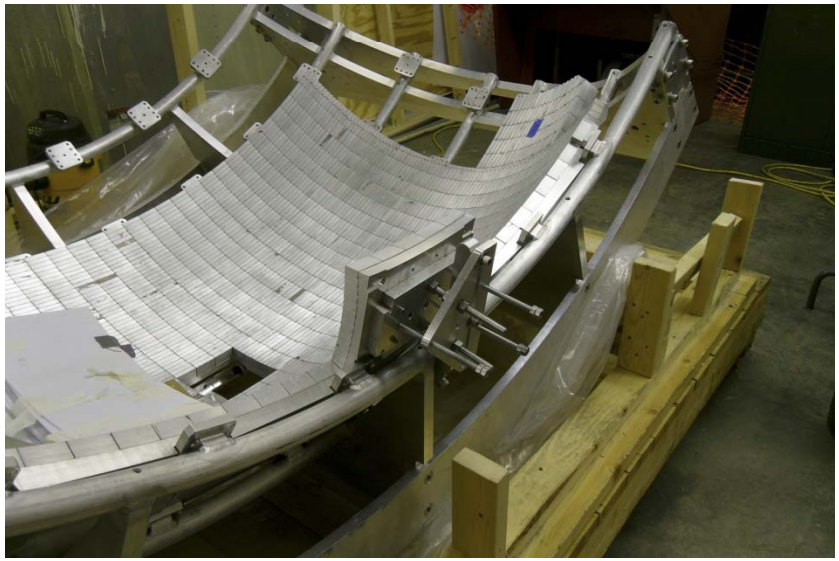

Construction Progress

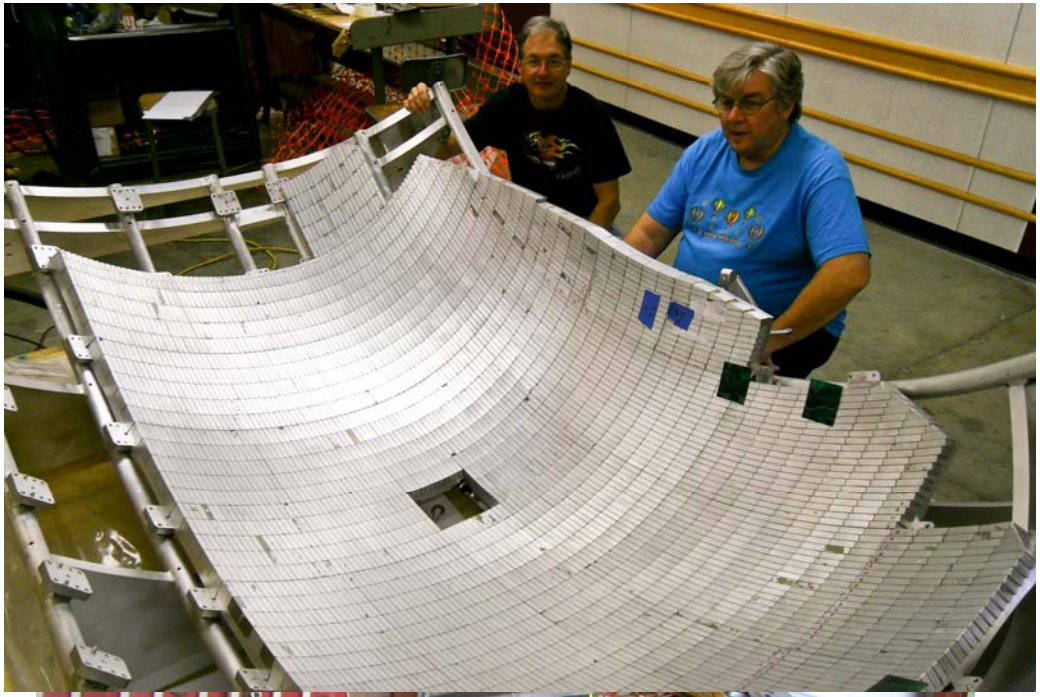

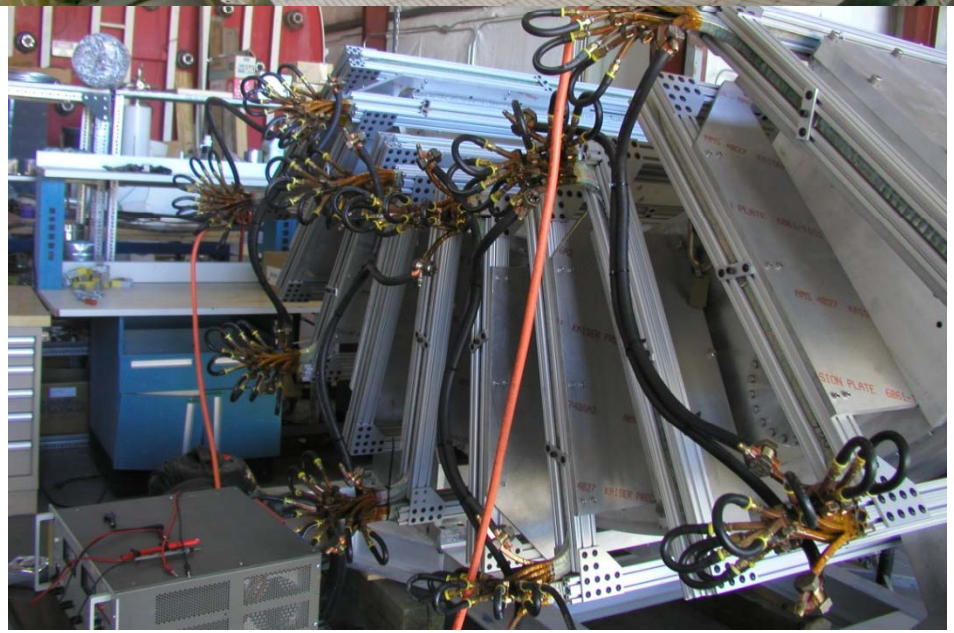

Summary

- UCN in a Magneto-gravitational Trap
  - No material interactions
  - Only conservative fields are present. Monte-Carlo simulations are reliable.
- Will initially use operating UCN D_2 spallation source at LANSCE
  - Compatible beam-sharing with UCNA, B experiments
- PPM and spin flipper can select spin state
- Large trap volume, > 1 UCN cm^{-3} in the experiment (> 10 UCN cm^{-3} in the source), sufficient statistics for 1 s measurement; 0.1 s more challenging.
- Room temperature experiment, study of versatile detecting schemes possible.
- Hopefully trapping neutrons this accelerator cycle! Comparison of systematic effects to Monte Carlo will commence immediately.

Backup slides

UCNτ

Big-Bang Nucleosynthesis

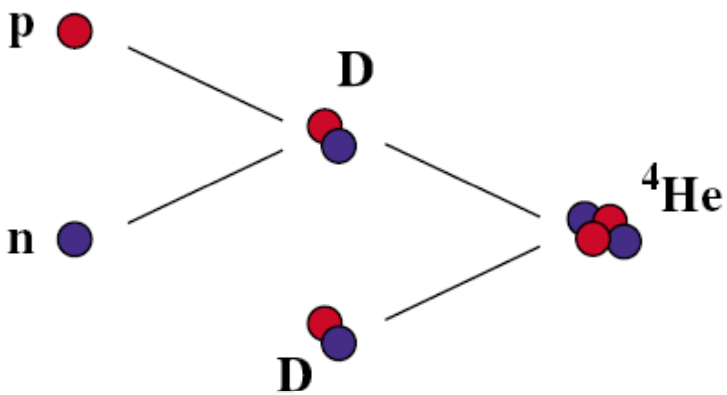

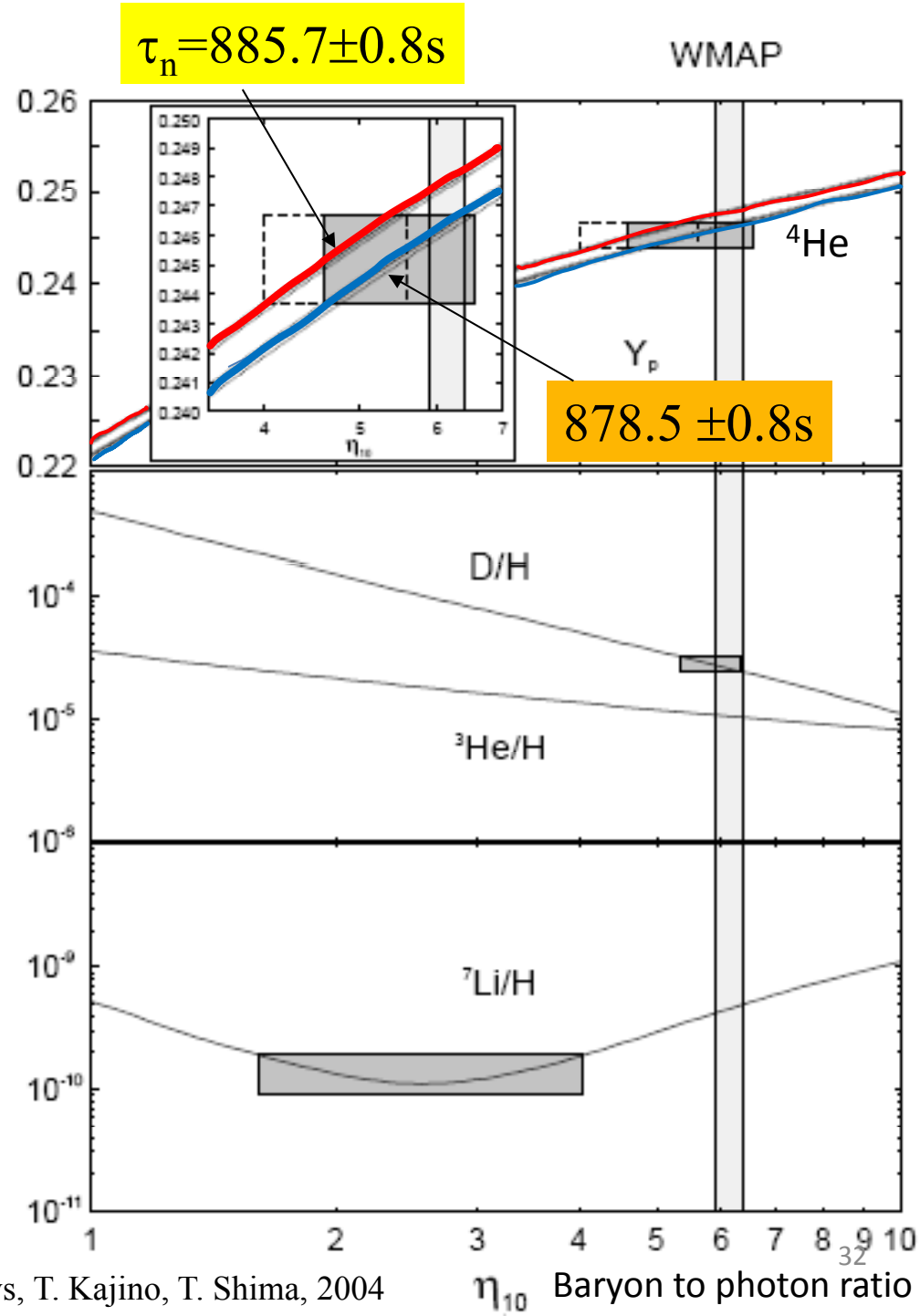

1% change of τ_n

→ 0.75 % change of ^{4}He abundance (0.61%).

→ 17 % change of η_{10} (3.3%)

G. Mathews, T. Kajino, T. Shima, 2004

Probing Physics Beyond the Standard Model Through Neutron β-Decay

- Neutron beta decay as a probe for physics beyond the standard model
  - Quark mixing in standard model
  - Unitarity sum rule violated?

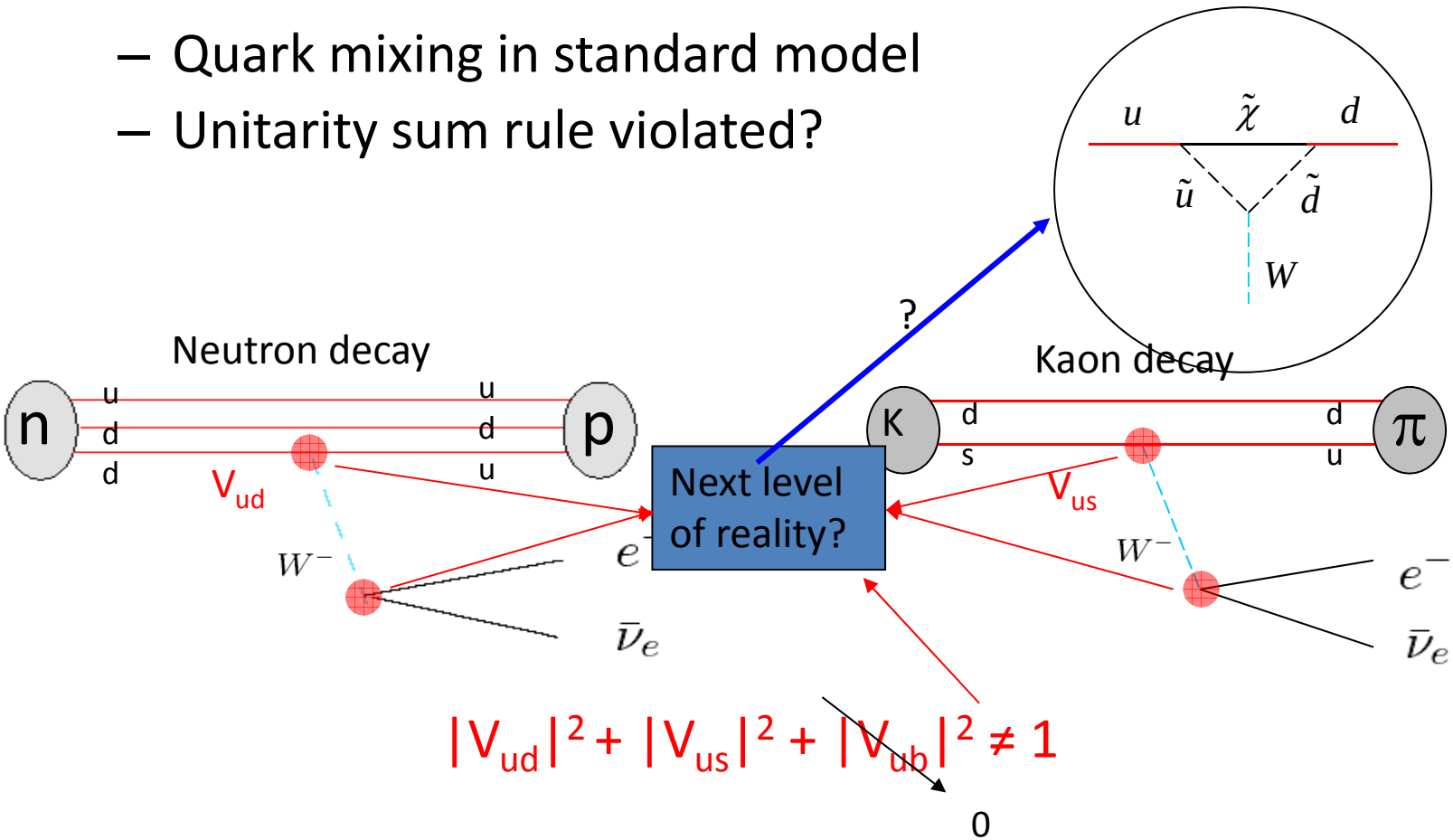

$$|V_{ud}|^2 + |V_{us}|^2 + |V_{ub}|^2 \neq 1$$

0

The UCN source at LANSCE

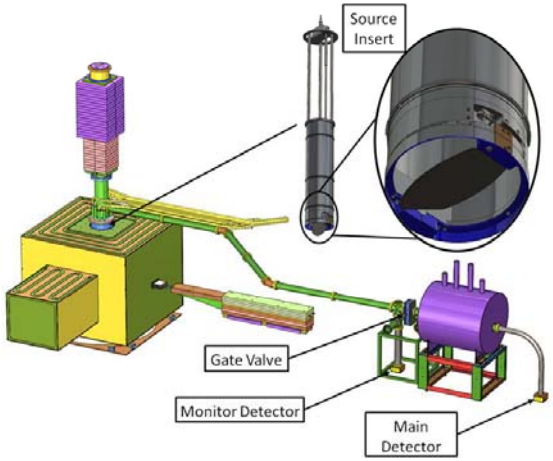

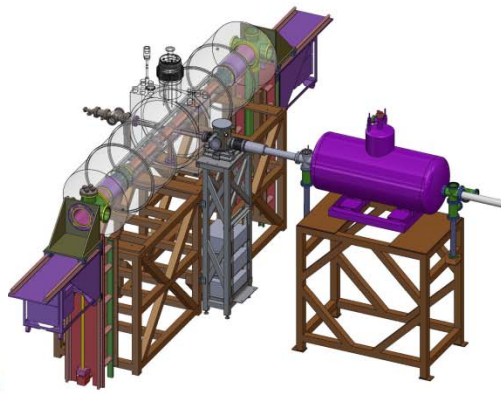

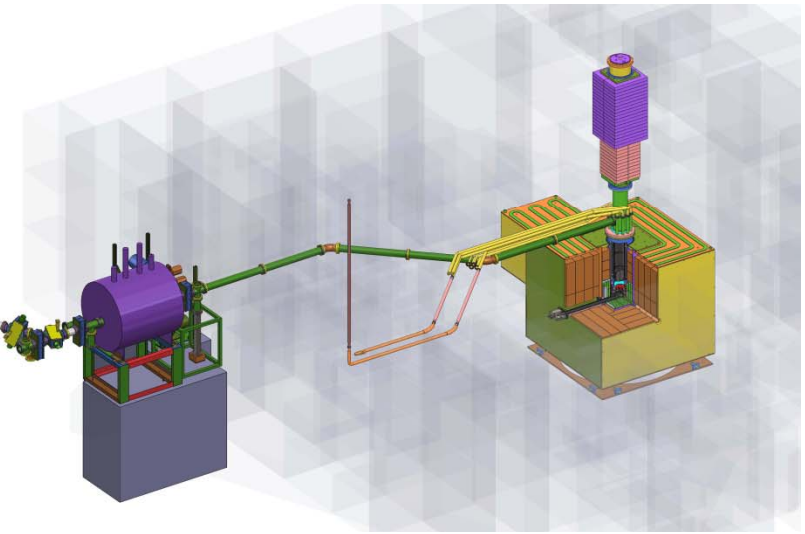

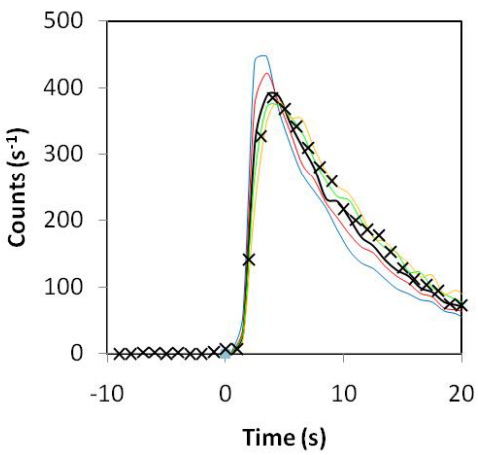

Non-specularity=3%

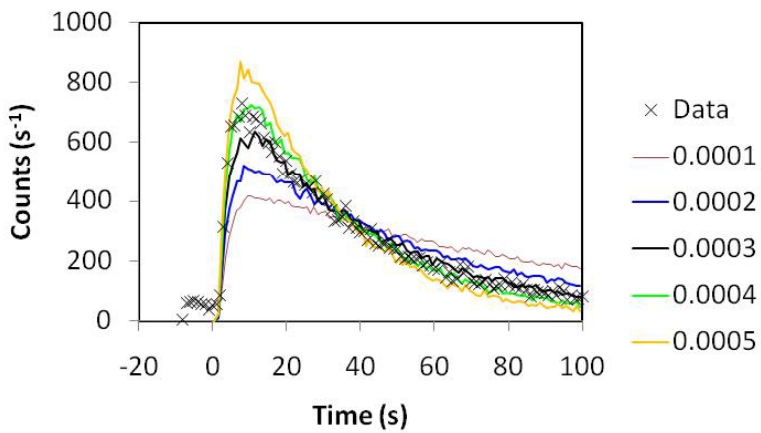

Loss/bounce=3.5×10^{-4}

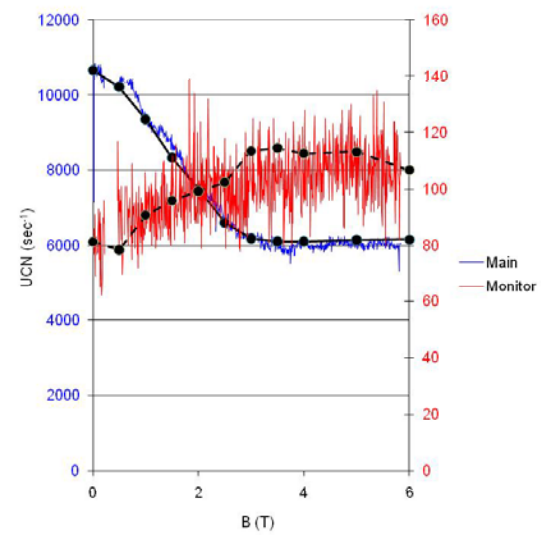

ρ=80 UCN/cm^3

Experiment Status

- The major item is the magnet array
  - Support frame is complete
  - About half of magnets are mounted
  - Forming a trap 15 cm deep
  - But magnet company is out of business
  - Rest of material is procured
- Vacuum systems procured
- Vacuum can tested
- UCN detectors ready (tube and box)
- Guides and switches
  - Materials in hand
  - UCNA switch/roundhouse still in design
  - UCN trap door procured
- Cleaner ready for testing
- Support Stand procured
- Still needed items:
  - Beta detectors (?), holding field coils
  - In situ neutron detectors
  - Return yoke (?)
  - Spin flipper
  - Clear space for experiment

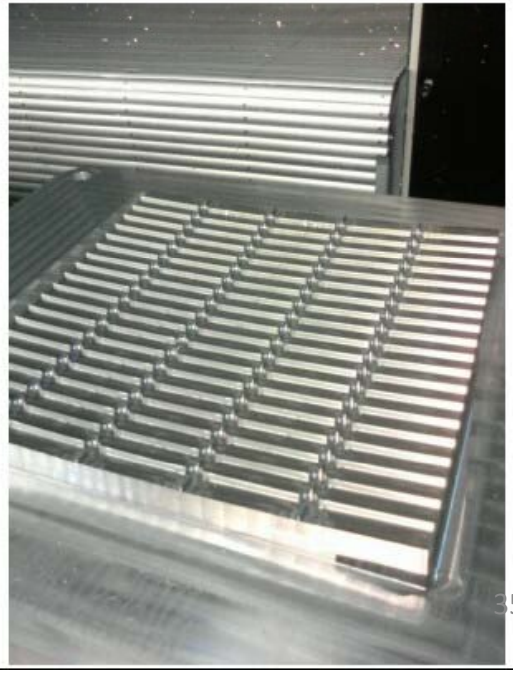

International competition in UCN production

Courtesy: O. Zimmer

Source location	Source type	UCN density [cm^{-3}]	comment	when?
ILL Grenoble, PF2	LD_2 + turbine	50	still THE source	> 1985
Los Alamos, 2.4 kW_{av} proton	SD_2	120	in source	now
Mainz TRIGA *upgraded*	SD_2	20 *~ 200*	in V = 10 l	now 2009
ILL Grenoble, H172 *upgraded + magnetic trap*	He-II (0.5 K)	> 1000 *2000 polarised*	in V = 6.4 l *up to 40 l*	2009 > 2011
PSI, 12 kW_{av} proton	SD_2	> 1000	in V = 2000 l	2010
North Carolina, 1 MW reactor	SD_2	1300	in source	2011
Munich, 20 MW reactor	SD_2	~ 10000	in source	2011
PNPI, 16 MW reactor	He-II (1.2 K)	13000 7700	in 35 l exp. bottle in 350 l exp. bottle	2012
TRIUMF, 5 kW_{av} proton	He-II (0.8 K)	18000	at exp. port	proposal

+ insitu He-II UCN sources at ILL (Cryo-EDM), NIST (n-lifetime), and SNS (EDM)

UCN Lifetime Experiment at NIST

- Liquid He Source
- Magnetically trapped in liquid Helium.
- Decayed βs counted.

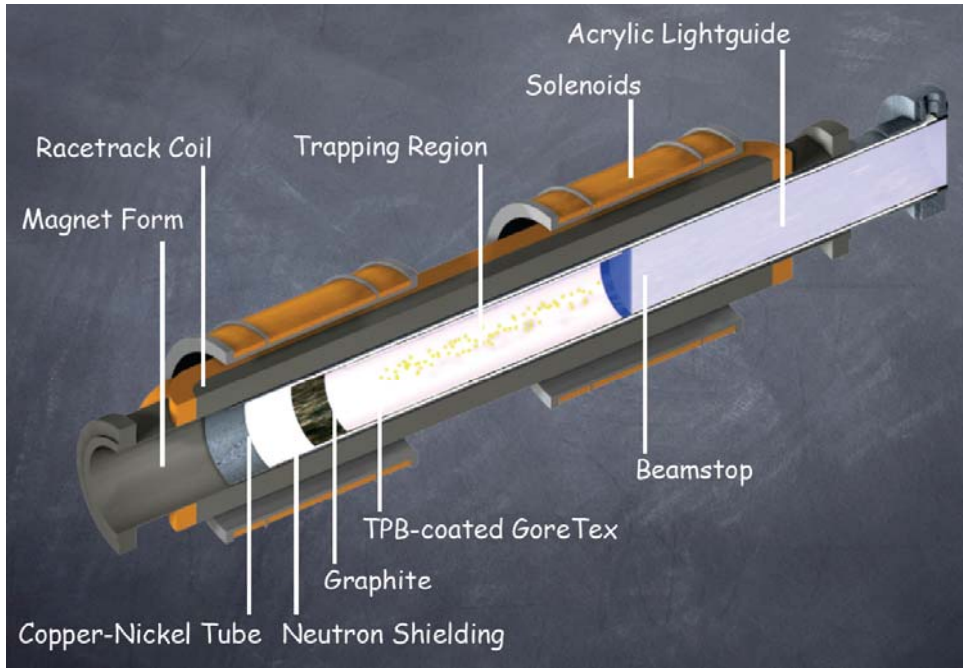

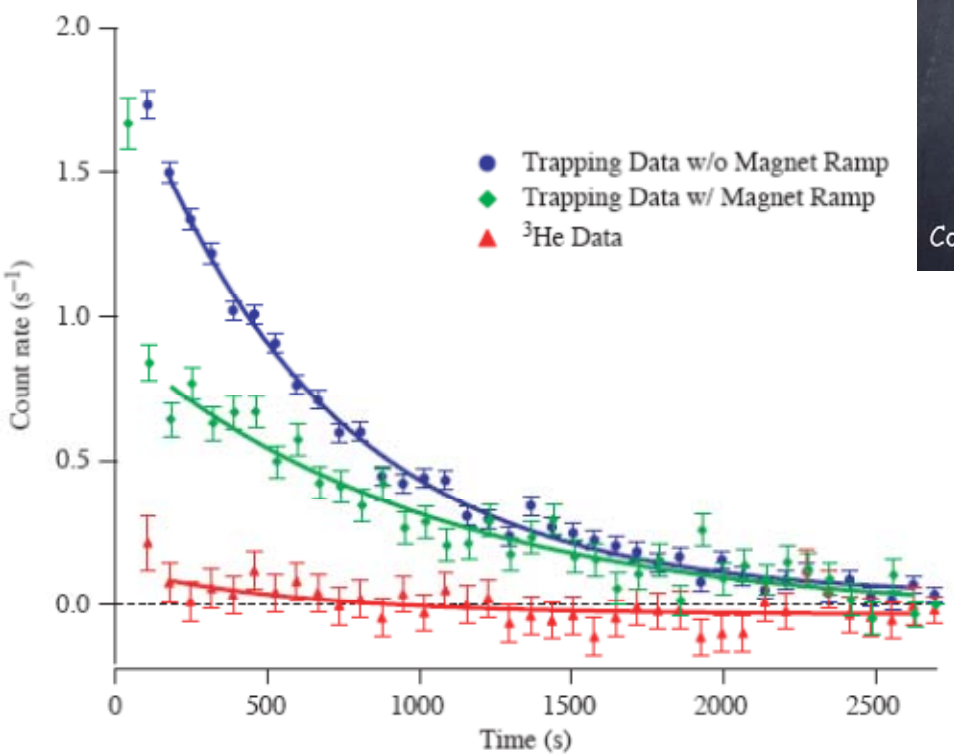

A superconducting Ioffe trap

UCN production in He-II and in-situ detection (NIST)

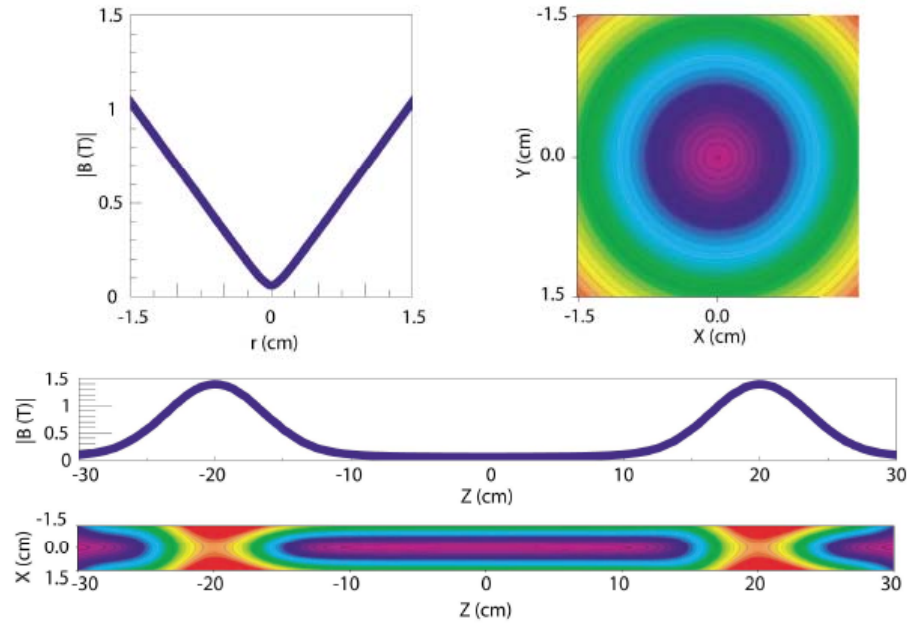

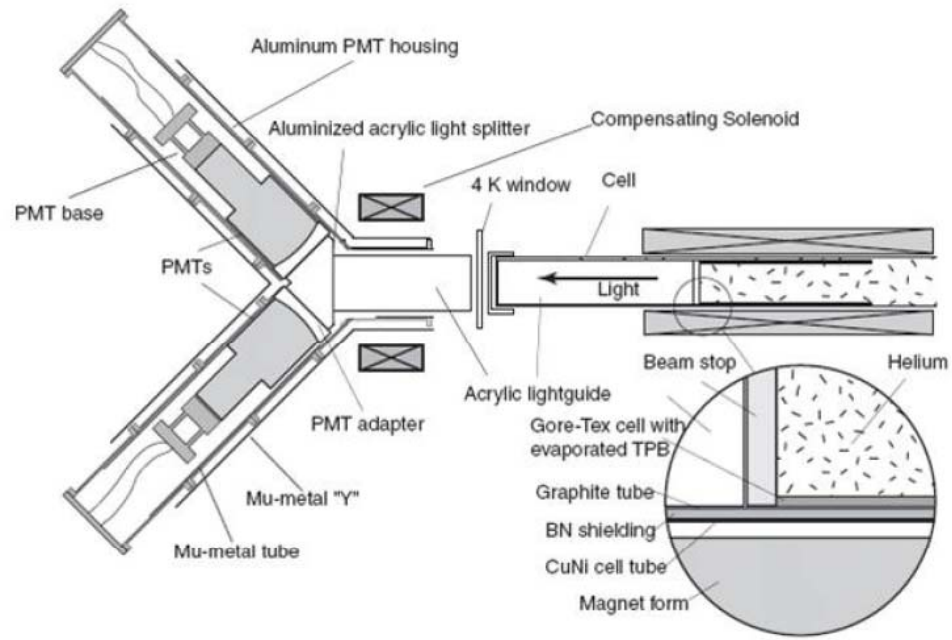

P. Huffman et al., Int. workshop Particle Physics with slow Neutrons, May 2008 ILL

UCN Lifetime Experiment at the ILL

2004

increase storage volume from 3.6 l to 15 l

2003

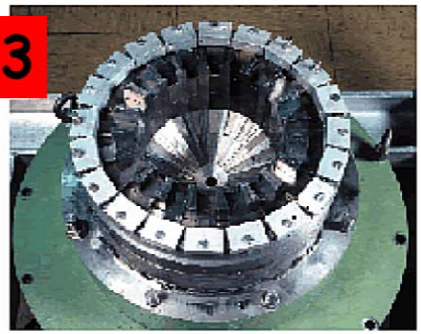

Top view of the storage bottle made of permanent magnets.

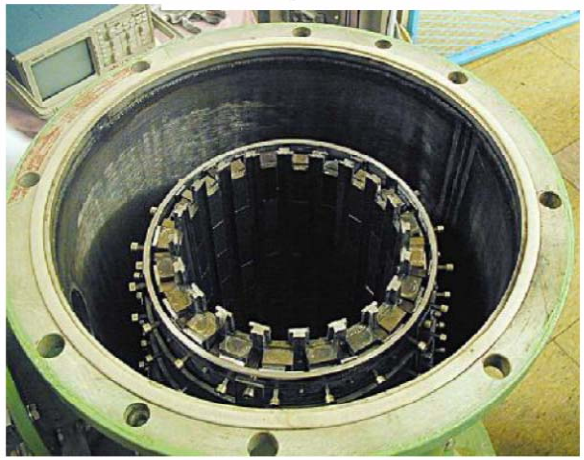

P. Geltenbort (V. Ezhov) Universidat Autonoma, Madrid, 30 November 2007 45

- Neutrons from the ILL turbine.
- Trapped with permanent magnets and gravity.
- Surviving neutrons counted.

V. Ezhov *et al.*, J. Res. NIST 110 (2005) 345

Unpublished; in development

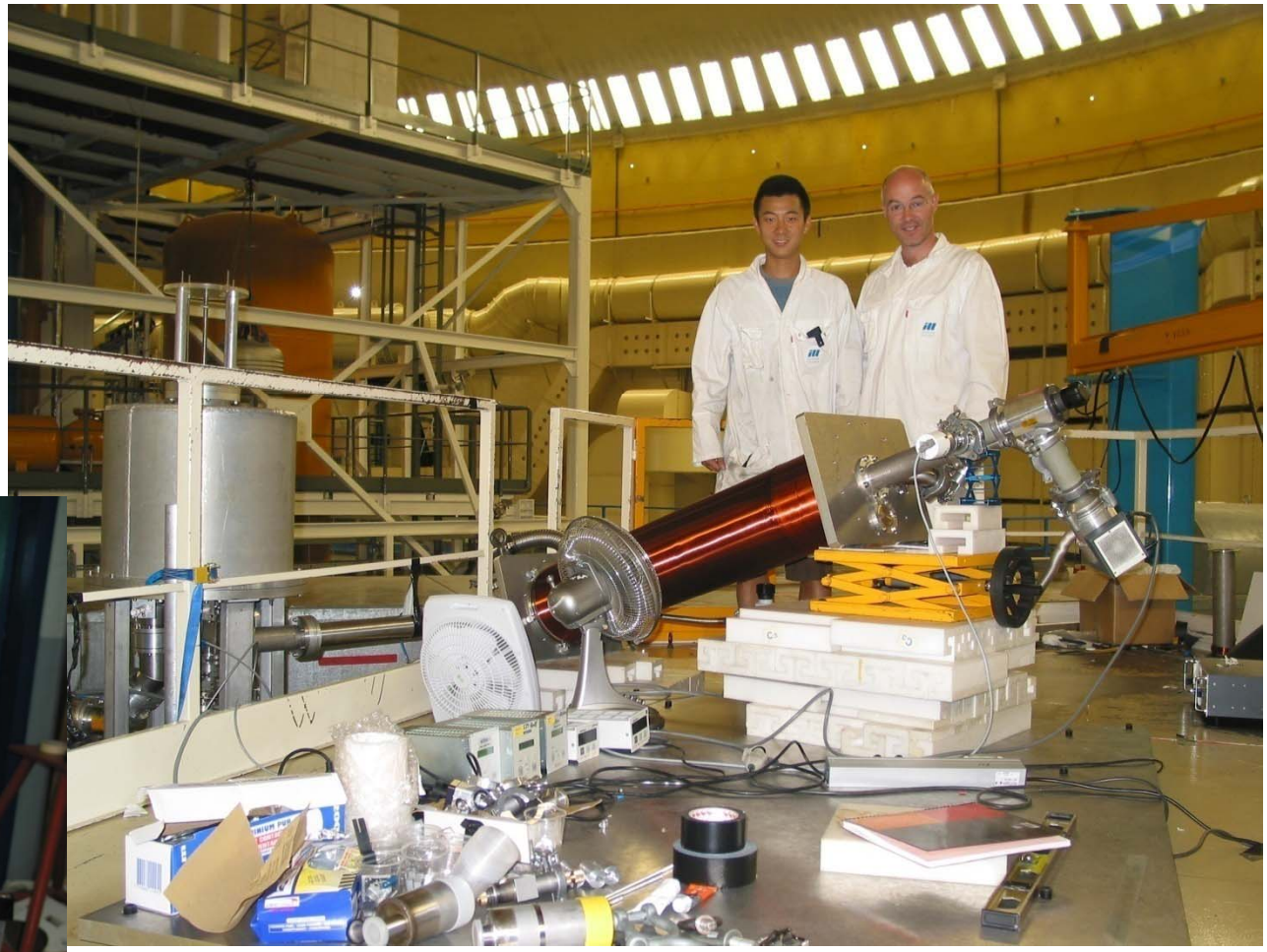

Responsibilities

- Construction underway
  - LANL: preliminary concept design, engineer design, vacuum chamber, Halbach PM array
  - IU: Holding field coils (100 gauss air-cooled EM), detector concept design, detailed simulations (GEANT4 neutron tracking, FEA field 3-D map, Garfield gaseous detector)

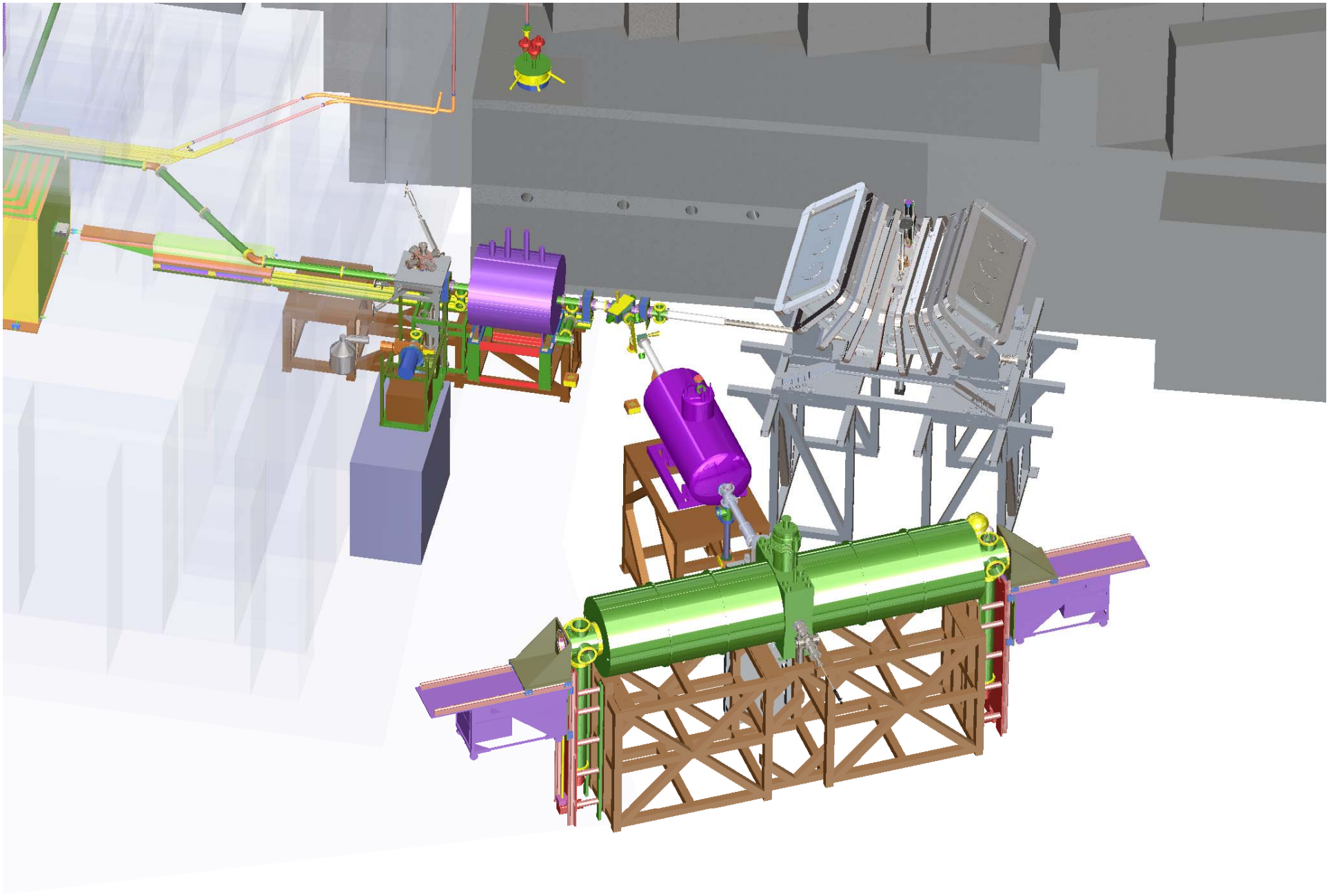

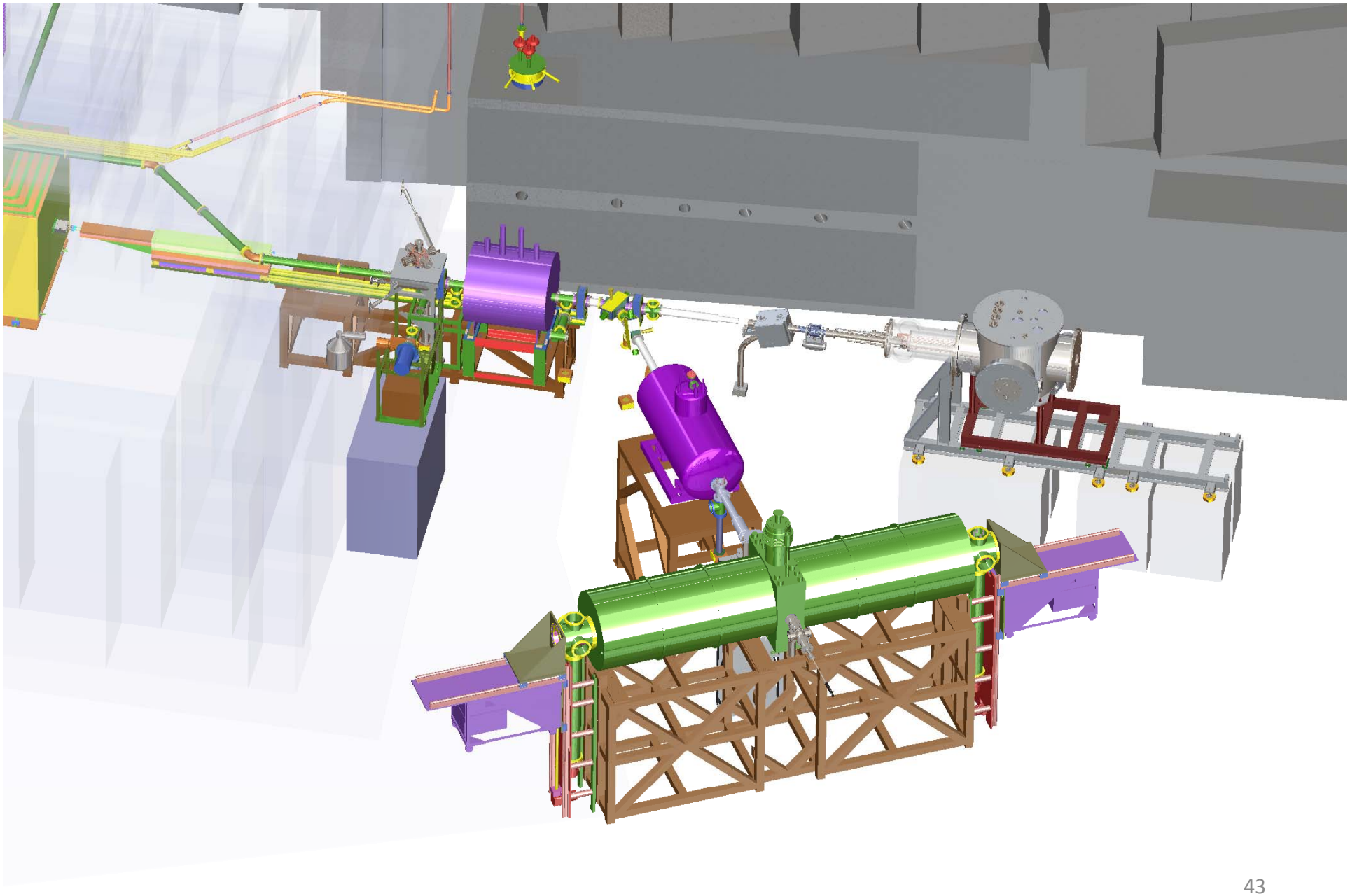

Halbach array

- Each magnet 90º out of phase with its neighbor.
- The array has B field “ripples” of scale L/4 = 0.5 in
- Rotating field is orthogonal to holding field B_0

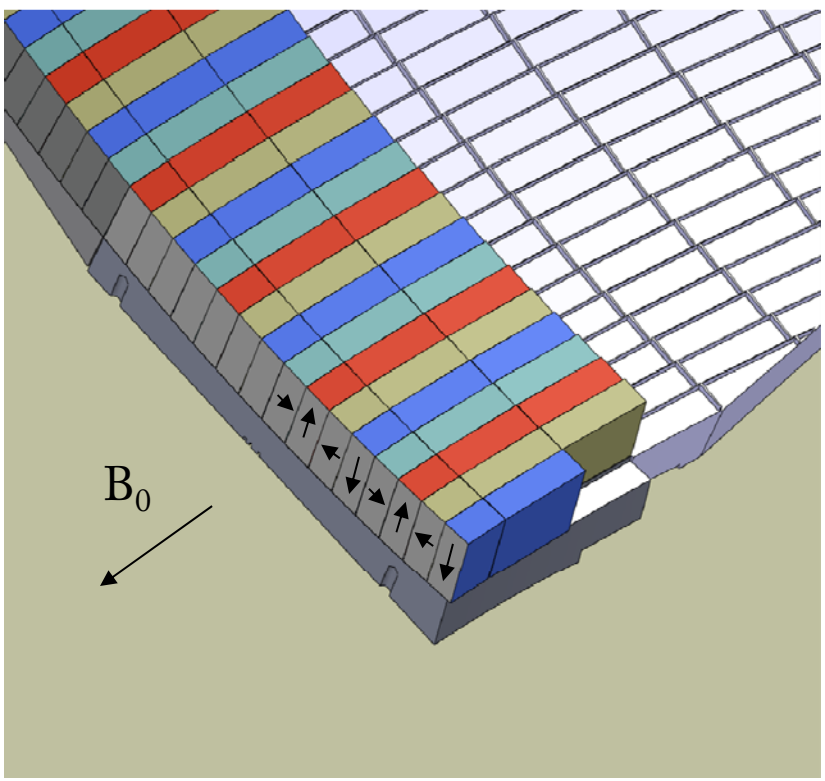

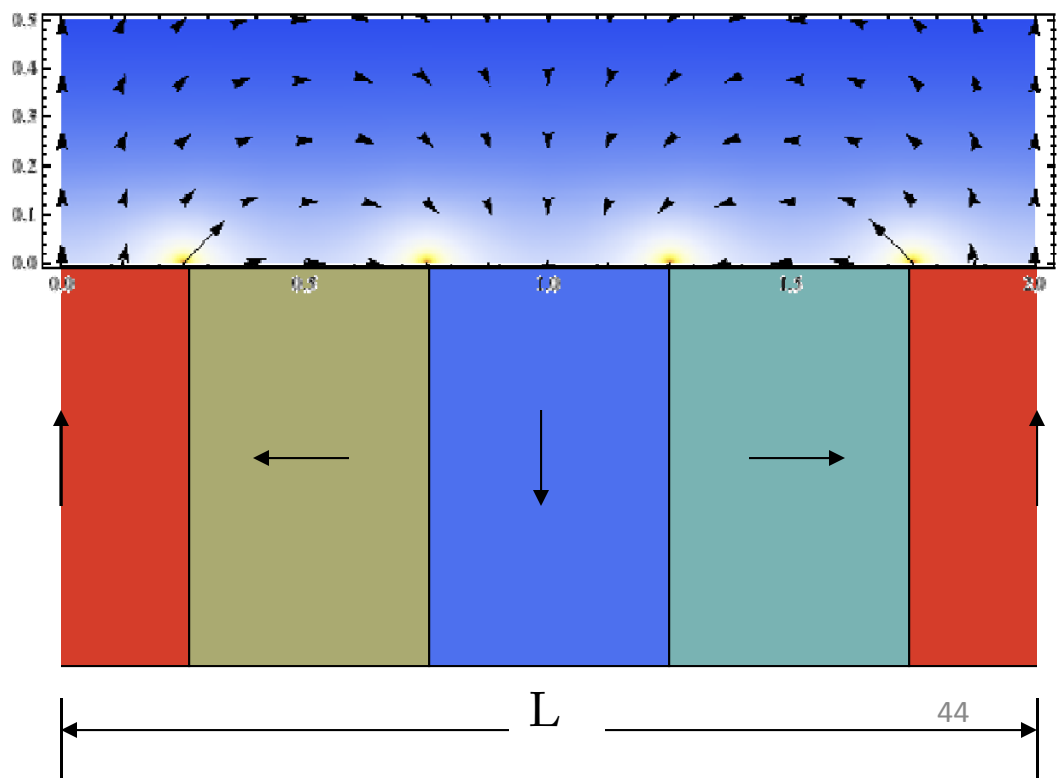

Linear Halbach Arrays

- Ideal linear Halbach array- continuous limit

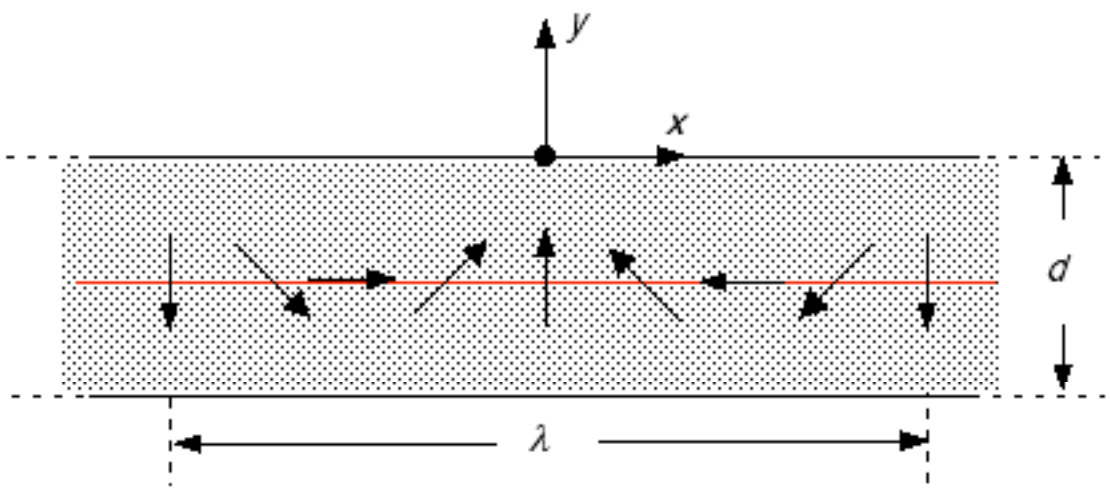

$$M_x = -B_{\text{rem}} \sin kx \qquad B_x = B_{\text{rem}}\left(1-e^{-kd}\right)e^{-ky} \sin kx$$

$$M_y = B_{\text{rem}} \cos kx \qquad B_y = B_{\text{rem}}\left(1-e^{-kd}\right)e^{-ky} \cos kx$$

$$|\mathbf{B}| = B_{\text{rem}}\left(1-e^{-kd}\right)e^{-ky}$$

$$k = \frac{2\pi}{\lambda}$$

- |**B**| approaches maximum of B_{rem} when d is large.
- Zero field on bottom.

Finite Halbach Arrays

- Approximate continuous array with finite-width blocks.
- Magnetization vector **M** is constant in magnitude and direction within a block, same magnitude $|\mathbf{M}| = B_{rem}$ in all blocks.

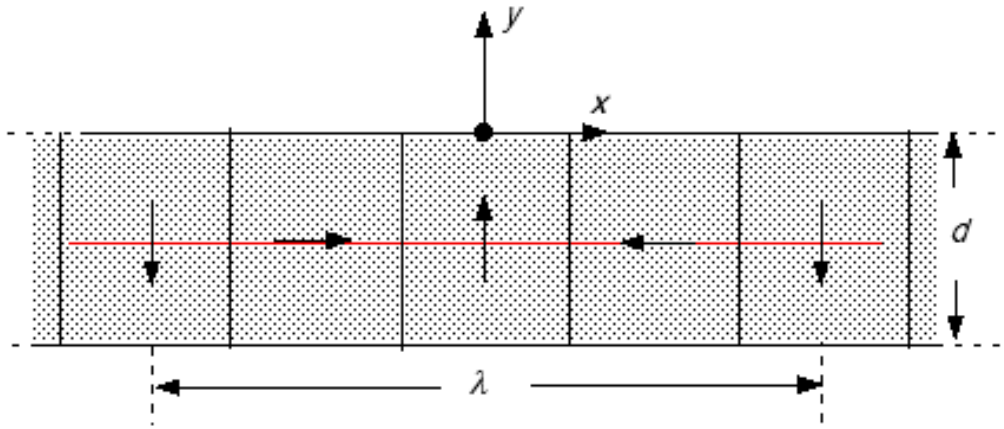

1st-order array: 0 and 90-deg. blocks

- Low field on bottom, high field on top

Finite Halbach Arrays (cont.)

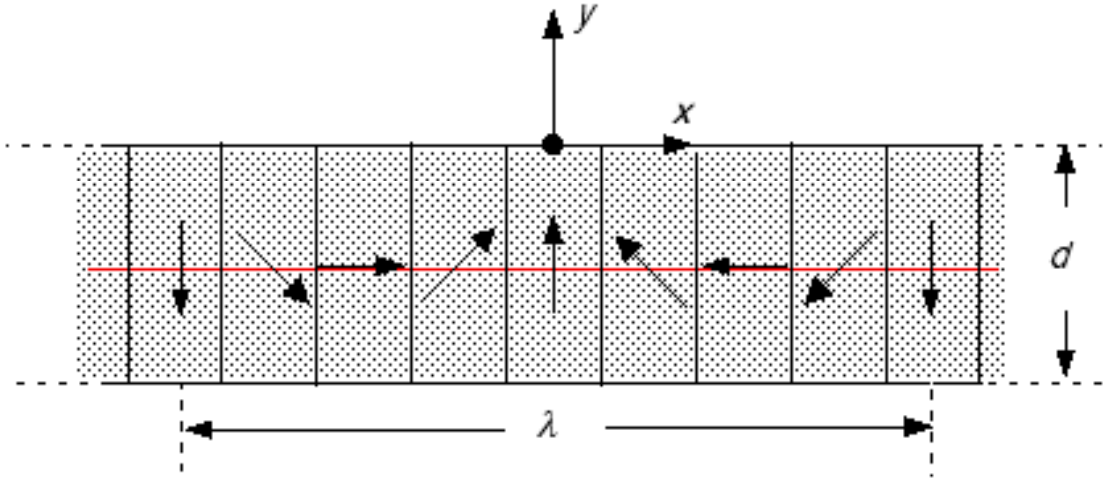

$$B_y + iB_x = \sum_{n=1}^{\infty} a_n e^{ik_n x} e^{-k_n y}$$

2nd-order array: 0, 45, and 90-deg. blocks

- Finite blocks and slightly non-linear behavior of PM material introduce higher Fourier components.
- Fundamental of 1st-order array is 0.9003 ($4/\pi\sqrt{2}$) times the continuous-array field. Next component is the *n*=5 component.
- Fundamental of 2nd-order array is 0.9745 times the continuous-array field. Next component is the *n*=7 component.

V_{ud} for unitarity test

model-independent external radiative correction, $\delta'_R = 1.466 \times 10^{-2}$

$$ft(1+\delta'_R) = \frac{K}{|V_{ud}|^2 G_F^2 (1+3\lambda^2)(1+\Delta_R)}$$

f: Phase space factor=1.6886 (Fermi function, nuclear mass, size, recoil)

From μ-decay: 8.6 ppm

model-dependent internal radiative correction, $\Delta R = 2.40 \times 10^{-2}$

$$|V_{ud}|^2 = \frac{4908.7 \pm 1.9s}{\tau_n (1+3\lambda^2)}$$

- To be comparable to the theoretical uncertainty: 4×10^{-4}, requires experimental uncertainty: $\underline{\Delta A/A = 4\Delta\lambda/\lambda < 2 \times 10^{-3}}$ and $\underline{\Delta\tau/\tau = 10^{-3}}$.

Ultracold Neutrons

- Nuclear force (max: 350neV)

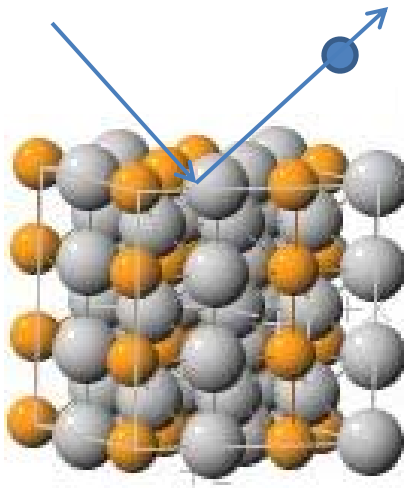

- Magnetic force (60neV/T)

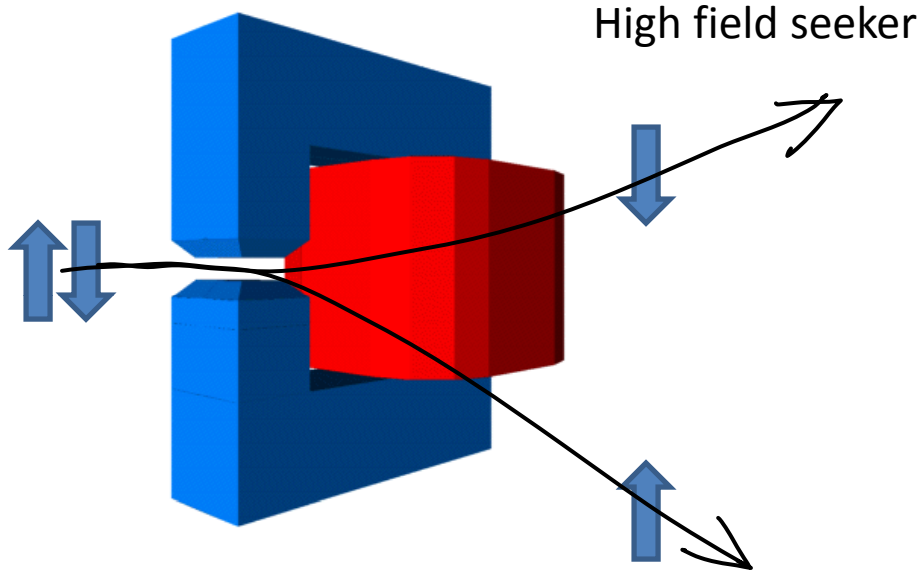

- Gravitational force (100 neV/m)

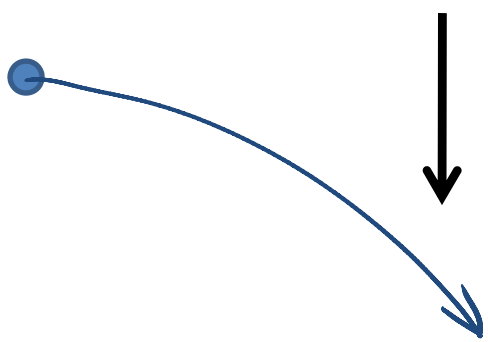

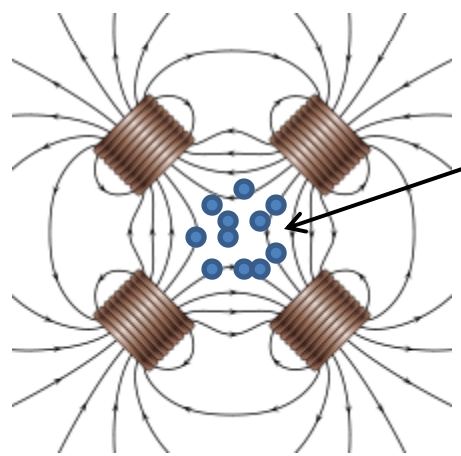

Low field seekers

magnetic quadruple trap

What we have now: 50% trap

- Reduced trap size ~ 82 liters
- But what is the number of UCN trapped?

v^3dv distribution, due to absorption and other losses in a thick D_2 source.

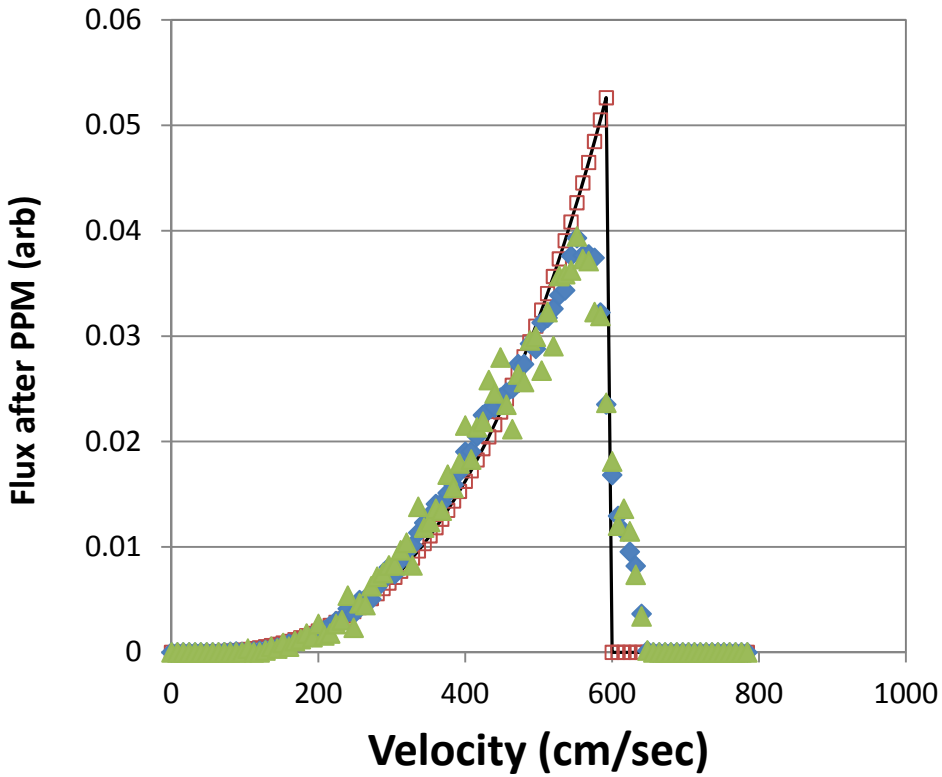

Raise the experiment by 1 m